# PRODUCT APPROVAL FOR HR-251DG IMPACT-RESISTANT CAPTURED DRY GLAZED CURTAIN WALL SYSTEM WITH MULTIPLE GLAZING INFILLS FOR USE IN HURRICANE ZONES REQUIRING LARGE MISSILE IMPACT PROTECTION.

## GENERAL NOTES:

1. HR-251DG CAPTURED CURTAIN WALL SYSTEM LARGE MISSILE IMPACT INSULATED GLASS, SHOWN ON THIS PRODUCT EVALUATION DOCUMENT (P.E.D.) HAS BEEN VERIFIED FOR COMPLIANCE IN ACCORDANCE WITH THE 2020 (7th EDITION) OF THE FLORIDA BUILDING CODE. CURTAIN WALL MAY BE INSTALLED WITHIN HIGH VELOCITY HURRICANE ZONES (HVHZ) AND OUT OF THEM (NHVHZ).

   DESIGN WIND LOADS SHALL BE DETERMINED AS PER SECTION 1620 (HVHZ) & 1609(NHVHZ) OF THE ABOVE MENTIONED CODE, FOR A BASIC WIND SPEED AS REQUIRED BY THE JURISDICTION WHERE THIS PRODUCT TO BE INSTALLED FOR A DIRECTIONALITY FACTOR Kd=0.85, USING ASCE 7-16 & SHALL NOT EXCEED THE MAXIMUM (A.S.D.) DESIGN PRESSURE RATING INDICATED ON NOTE 2.

   IN ORDER TO VERIFY THE ABOVE CONDITION, ULTIMATE DESIGN WIND LOADS DETERMINED PER ASCE 7-16 SHALL BE FIRST REDUCED TO A.S.D. DESIGN WIND LOADS BY MULTIPLYING THEM BY 0.6 IN ORDER TO COMPARE THESE W/ MAX. (A.S.D) DESIGN PRESSURE RATINGS INDICATED ON NOTE 2.

   IN ORDER TO VERIFY THAT ANCHORS ON THIS P.E.D., AS TESTED, WERE NOT OVERSTRESSED, A 33% INCREASE IN ALLOWABLE STRESS FOR WIND LOADS WAS NOT USED IN THEIR ANALYSIS.

   THIS PRODUCT'S ADEQUACY FOR IMPACT AND CYCLIC RESISTANCE HAS BEEN VERIFIED IN ACCORDANCE WITH SECTION 1626 & 1609.1.2 OF THE ABOVE MENTIONED CODE AS PER ASTM E1886 & E1996 BY ARCHITECTURAL TESTING REPORTS # A3498.02-801-18, PER PROTOCOLS TAS-201, TAS-202 & 203, AAMA 501 (PER SECTIONS 2411.3.2.1.1 & 1709.8.4) PER ARCHITECTURAL TESTING INC. REPORT # A3498.01-801-18, AND PER HURRICANE TESTING LABORATORY REPORTS # 0105-1208-05 AND 0105-0903-08, 0105-0117-05, 0105-0210-04 AND PER ARCHITECTURAL TESTING INC. REPORT # A4707.01-0801-18, AND AS PER STRUCTURAL CALCULATIONS PERFORMED AS PER SECTIONS 1616 & 1604 OF FLORIDA BUILDING CODE.

2. MAXIMUM A.S.D. DESIGN PRESSURE RATING FOR THIS CURTAIN WALL SHALL BE AS SHOWN ON SHEETS 8, 9, 10, 12, 13 AND 14 THRU 17, AND 22A.

3. THIS PRODUCT WILL NOT REQUIRE A HURRICANE PROTECTION DEVICE.

4. THIS PRODUCT IS APPROVED FOR AIR/WATER INFILTRATION (15.0 PSF WATER PRESSURE).

5. HR-251DG CAPTURED CURTAIN WALL SYSTEM LARGE MISSILE IMPACT INSULATED GLASS SHALL COMPLY WITH SECTION 2406 OF THE FLORIDA BUILDING CODE.

6. ALL STEEL FRAMING SHALL BE WELDED IN ACCORDANCE WITH THE AMERICAN WELDING SOCIETY A.W.S. D.1.1 REGULATIONS. USE CERTIFIED WELDERS. USE E-70XX ELECTRODES. ALL JOINT WELDING BETWEEN ANGLES AND STEEL STRUCTURE SHALL BE 3/16" FILLET WELD TYPE.

7. PROVIDE 3/4" MAX. LOAD BEARING SHIM (TYP.), WHEN ALLOWED BY THIS P.A.D.

8. SEE ANCHOR SCHEDULES ON SHEETS 12, 13 AND 14 THRU 17 FOR ANCHOR TYPE IDENTIFICATION AND SPACING.

9. REMAINING COMPONENTS FOR THIS CURTAIN WALL SYSTEM SHALL BE AS INDICATED ON BILL OF MATERIALS, SHEETS 4 AND 5 OF THIS DRAWING.

10. ALL ALUMINUM EXTRUSIONS IN CONTACT WITH DISSIMILAR MATERIALS SHALL COMPLY WITH SECTION III-6 OF THE 2015 ALUMINUM DESIGN MANUAL.

11. SHOP DRAWINGS PREPARED BASED ON THIS APPROVAL AND TAKING INTO ACCOUNT THE SPECIFIC JOB CONDITIONS, SHALL BE SUBMITTED TO THE BUILDING OFFICIAL AS PART OF THE PERMIT DOCUMENTS.

12. SUBSTRATE MATERIAL NOTED ON THESE DRAWINGS AS "BY OTHERS" MUST WITHSTAND THE LOADS IMPOSED BY THE CURTAIN WALL SYSTEM.

13. THIS PRODUCT'S INSTALLATION SHALL COMPLY WITH ALL SPECS INDICATED IN THIS DRAWING PLUS ANY BUILDING AND ZONING REGULATIONS PROVIDED BY THE JURISDICTION WHERE PERMIT IS APPLIED TO.

14. (a) THIS P.E.D. PREPARED BY THIS ENGINEER IS GENERIC AND DOES NOT PROVIDE INFORMATION FOR A SITE SPECIFIC PROJECT; i.e. WHERE THE SITE CONDITIONS DEVIATE FROM THE P.E.D.

    (b) CONTRACTOR TO BE RESPONSIBLE FOR THE SELECTION, PURCHASE AND INSTALLATION INCLUDING LIFE SAFETY OF THIS PRODUCT, BASED ON THIS P.E.D., PROVIDED HE/SHE DOES NOT DEVIATE FROM THE CONDITIONS DETAILED ON THIS DOCUMENT. CONSTRUCTION SAFETY AT SITE IS THE CONTRACTOR'S RESPONSIBILITY.

    (c) THIS P.E.D. WILL BE CONSIDERED INVALID IF ALTERED BY ANY MEANS.

    (d) SITE SPECIFIC PROJECTS SHALL BE PREPARED BY A FLORIDA REGISTERED ENGINEER OR ARCHITECT WHICH WILL BECOME THE ENGINEER OF RECORD (E.O.R.) FOR THE PROJECT AND WHO WILL BE RESPONSIBLE FOR THE PROPER USE OF THE P.E.D. ENGINEER OF RECORD, ACTING AS DELEGATED ENGINEER TO THE P.E.D. ENGINEER, SHALL SUBMIT TO THIS LATTER THE SITE SPECIFIC DRAWINGS FOR REVIEW.

    (e) ORIGINAL P.E.D. SHALL BEAR THE DATE AND ORIGINAL SEAL AND SIGNATURE OF THE PROFESSIONAL ENGINEER OF RECORD THAT PREPARED IT.

15. PRODUCT MANUFACTURER'S LABEL SHALL BE LOCATED ON A READILY VISIBLE LOCATION AT PRODUCT IN ACCORDANCE WITH SECTION 1709.5 OF THE FLORIDA BUILDING CODE. ONE LABEL SHALL BE PLACED FOR EVERY OPENING.

## INDEX:


SHEET 1: GENERAL NOTES, INDEX AND INSTRUCTIONS.
SHEET 2: HR-251 IMPACT RESISTANT CAPTURED CURTAIN WALL SYSTEM COMPONENTS.
SHEET 3: HR-251 IMPACT RESISTANT CAPTURED CURTAIN WALL SYSTEM COMPONENTS (CONTINUED).
SHEET 4: BILL OF MATERIALS.
SHEET 5: BILL OF MATERIALS (CONTINUED).
SHEET 6: ISOMETRIC ELEVATION FOR HR-251 IMPACT RESISTANT CAPTURED CURTAIN WALL SYSTEM.
SHEET 7: TYPICAL GLAZING DETAILS.
SHEET 8: MAX. FRAME WIDTH "b" & FRAME LENGTH "a" VERSUS A.S.D. DESIGN PRESSURE RATING (p.s.f.) SCHEDULE.
SHEET 9: MAX. A.S.D. DESIGN PRESSURE RATING FOR SINGLE SPAN STANDARD AND CORNER MULLIONS.
SHEET 10: MAX. A.S.D. DESIGN PRESSURE RATING FOR TWIN SPAN STANDARD AND CORNER MULLIONS.
SHEET 11: OPTIONS FOR TWIN SPAN STANDARD AND CORNER MULLIONS INSTALLATION.
SHEET 12: MAX. A.S.D. DESIGN PRESSURE RATING FOR SINGLE SPAN (HEAD & SILL) & TWIN SPAN (SILL ONLY) MULLION CONNECTIONS.
SHEET 13: MAX. A.S.D. DESIGN PRESSURE RATING FOR TWIN SPAN MULLION HEAD ANCHOR CONNECTIONS.
SHEET 14: MAX. A.S.D. DESIGN PRESSURE RATING FOR JAMBS AT SINGLE SPAN CURTAIN WALL FASTENED TO EXISTING STRUCTURE W/ 3/8"ø FASTENERS.
SHEET 15: MAX. A.S.D. DESIGN PRESSURE RATING FOR JAMBS AT TWIN SPAN CURTAIN WALL FASTENED TO EXISTING STRUCTURE W/ 3/8"ø FASTENER
SHEET 16: MAX. A.S.D. DESIGN PRESSURE RATING FOR JAMBS AT SINGLE SPAN CURTAIN WALL FASTENED TO EXISTING STRUCTURE W/ 1/2"ø FASTENERS.
SHEET 17: MAX. A.S.D. DESIGN PRESSURE RATING FOR JAMBS AT TWIN SPAN CURTAIN WALL FASTENED TO EXISTING STRUCTURE W/ 1/2"ø FASTENERS.
SHEET 18: HEAD CONNECTION DETAILS (SIDE VIEWS).
SHEET 19: HORIZONTAL CONNECTION DETAILS (SIDE VIEWS)
SHEET 20: SILL CONNECTION DETAILS (SIDE VIEWS).
SHEET 20A: HEAD SEALING (ISOMETRIC) & PRESSURE PLATE CONNECTION DETAIL.
SHEET 21: HORIZONTAL SECTIONS AT STANDARD MULLION DETAILS (PLAN).
SHEET 22: JAMB MULLIONS CONNECTIONS AT HORIZONTALS (PLAN).
SHEET 22A: JAMB MULLIONS NOT ATTACHED TO EXISTING STRUCTURE FOR SINGLE SPAN ONLY (PLAN), AND MAX. A.S.D. DESGIN PRESSURE RATING FOR SINGLE SPAN JAMB MULLIONS W/O ANCHORAGE
SHEET 23: CORNER MULLION DETAILS (PLAN).
SHEET 24: JAMB MULLIONS CONNECTIONS AT INSIDE CORNER (PLAN).
SHEET 24A: JAMB MULLIONS NOT ATTACHED TO INSIDE CORNER OF EXISTING STRUCTURE FOR SINGLE SPAN ONLY (PLAN).
SHEET 25: SILL & HEAD CONNECTION DETAILS FOR SINGLE SPAN & SILL CONNECTION DETAIL AT TWIN SPAN (PLANS).
SHEET 26: OPTION #1 FOR HEAD CONNECTION OF TWIN SPAN STANDARD MULLIONS.
SHEET 27: OPTION #2 FOR HEAD CONNECTION OF TWIN SPAN STANDARD MULLIONS.
SHEET 28: HEAD CONNECTION OF TWIN SPAN JAMBS.
SHEET 29: HEAD CONNECTION DETAIL FOR TWIN SPAN CORNER MULLION,
SHEET 30: MULLION AND JAMB SPLICES AT TWIN SPAN ONLY (PLAN).
SHEET 31: MULLION AND JAMB SPLICES AT TWIN SPAN ONLY (SIDE VIEW)
SHEET 32: CORNER MULLION SPLICE AT TWIN SPAN (PLAN).
SHEET 33: STANDARD AND CORNER MULLION CONNECTION TO EXISTING INTERMEDIATE FLOOR STRUCTURE W/ DEAD AND WIND LOAD ANCHORS.
SHEET 34: CORNER MULLION CONNECTION TO EXISTING INTERMEDIATE FLOOR STRUCTURE W/ DEAD & WIND LOAD ANCHORS (PLAN).
SHEET 35: DOOR HEADER CONNECTION TO CURTAIN WALL HORIZONTALS & DOOR SILL CONNECTION TO POURED CONCRETE STRUCTURE AND TO ADJACENT CURTAIN WALL MULLION "F".
SHEET 36: DOOR JAMBS CONNECTION TO CURTAIN WALL.


## INSTRUCTIONS:

STEP 1: DETERMINE A.S.D. DESIGN WIND LOAD REQUIREMENTS BASED ON WIND VELOCITY, BUILDING HEIGHT, WIND ZONE, USING APPLICABLE ASCE 7 STANDARDS.

STEP 2: GO TO SCHEDULE ON SHEET 8 TO DETERMINE MAXIMUM A.S.D. DESIGN PRESSURE RATING "W" (psf) OF DESIRED GLASS SIZE BASED ON GLASS PANEL DIMENSIONS.

STEP 3: DETERMINE MAXIMUM MULLION AND JAMB SPAN "L"(FT) FOR A GIVEN MULLION EFFECTIVE SPACING "b", FOR SINGLE AND TWIN SPANS ON SCHEDULES ON SHEETS 9, 10 AND 22A.

STEP 4: USING SCHEDULES ON SHEETS 12, 13 AND 14 THRU 17 SELECT ANCHOR OPTION FOR MULLIONS AND JAMBS WITH A.S.D. DESIGN PRESSURE RATING EQUAL OR GREATER THAN A.S.D. DESIGN LOAD SPECIFIED IN STEP 1.

STEP 5: USING SCHEDULE ON SHEET 19, VERIFY MAXIMUM A.S.D. DESIGN PRESSURE RATING OF HORIZONTALS (IF USED) AND HORIZONTAL EXPANSION.

STEP 6: THE LOWEST VALUE OF A.S.D. DESIGN PRESSURE RATING RESULTING FROM STEPS 2, 3, 4 AND 5 SHALL APPLY TO THE ENTIRE SYSTEM.

**THIS DRAWING SHALL ONLY BE USED TO OBTAIN PERMITS IN THE STATE OF FLORIDA**

FLORIDA BUILDING CODE (High & Non High Velocity Hurricane Zone)

HR-251DG CAPTURED DRY GLAZED CURTAIN WALL SYSTEM LARGE MISSILE IMPACT INSULATED GLASS

F.R.L DRAWN BY

04/15/2021 DATE

21-069 DRAWING No

SHEET 1 OF 36

Oldcastle BuildingEnvelope™
803 Airport Rd - Terrell, TX 75160
www.OldcastleBE.com - Phone 800-869-4567

| REV. No | DESCRIPTION | DATE | REV. No | DESCRIPTION | DATE |
|---|---|---|---|---|---|
| 1 | - | - | 3 | - | - |
| 2 | - | - | 4 | - | - |

©2021 TILTECO, INC


TILTECO INC.
TILLIT TESTING & ENGINEERING COMPANY
6355 N.W. 36th. St. Ste. 305, VIRGINIA GARDENS, FLORIDA 33166
Phone : (305)871-1530 . Fax : (305)871-1531
e-mail: tilteco@aol.com
CA-0006719
WALTER A. TILLIT Jr., P.E.
FLORIDA Lic. # 44167


WALTER A. TILLIT JR. LICENSE No. 44167 STATE OF FLORIDA PROFESSIONAL ENGINEER

P.E. SEAL/SIGNATURE/DATE

# HR-251DG IMPACT RESISTANT CAPTURED CURTAIN WALL SYSTEM COMPONENTS

SCALE : 1/4" = 1" (EXCEPT AS NOTED)

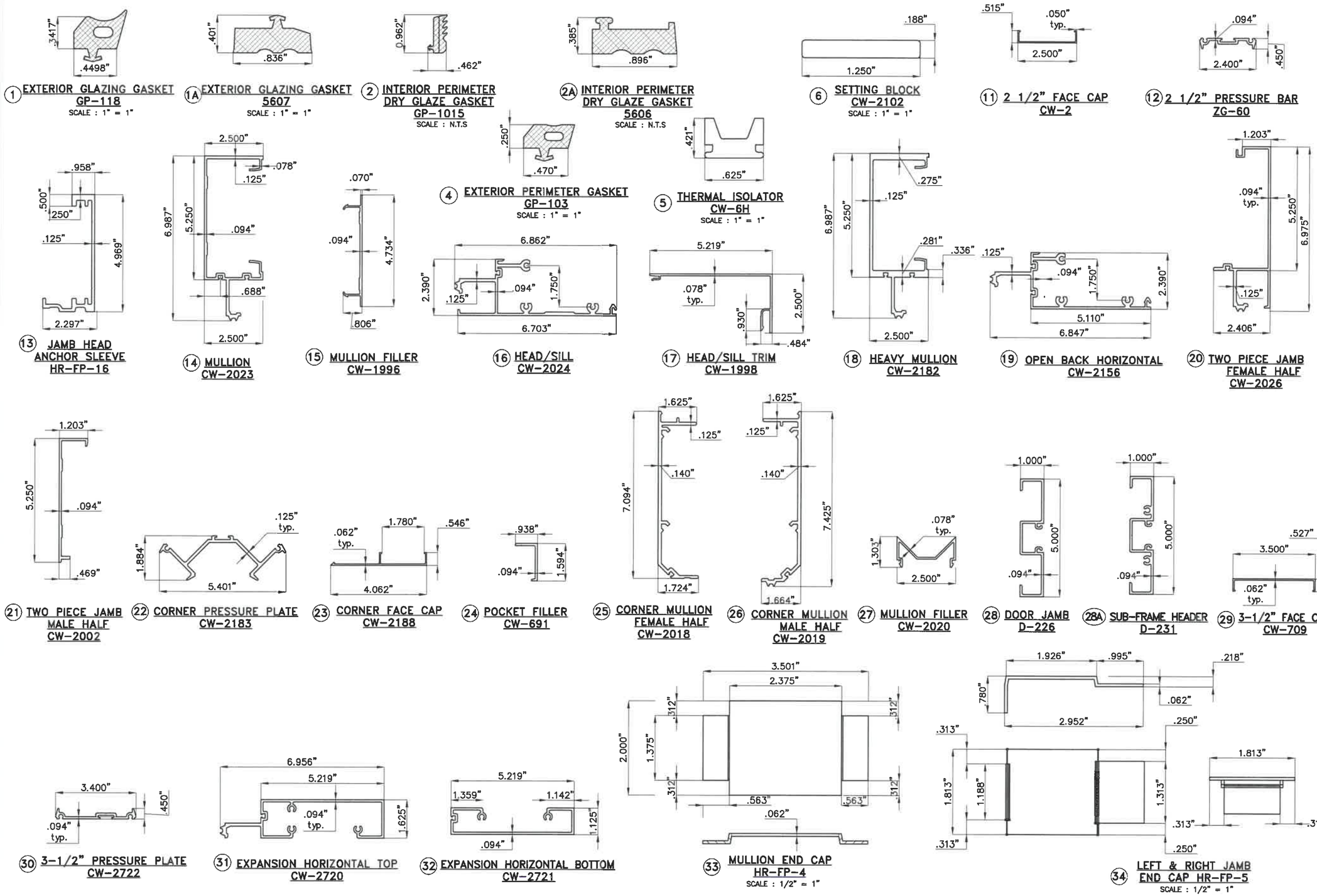


FLORIDA BUILDING CODE (High & Non High Velocity Hurricane Zone)

©2021 TILTECO, INC

TILTECO INC.

TILLIT TESTING & ENGINEERING COMPANY
6355 N.W. 36th. St. Ste. 305, VIRGINIA GARDENS, FLORIDA 33166
Phone : (305)871-1530 . Fax : (305)871-1531
e-mail: tilteco@aol.com
CA-0006719
WALTER A. TILLIT Jr., P.E.
FLORIDA Lic. # 44167

HR-251DG CAPTURED DRY GLAZED CURTAIN WALL SYSTEM LARGE MISSILE IMPACT INSULATED GLASS

Oldcastle BuildingEnvelope™
803 Airport Rd - Terrell, TX 75160
www.OldcastleBE.com - Phone 800-869-4567

| REV. No | DESCRIPTION | DATE | REV. No | DESCRIPTION | DATE |
|---|---|---|---|---|---|
| 1 | - | - | 3 | - | - |
| 2 | - | - | 4 | - | - |

F.R.L
DRAWN BY

04/15/2021
DATE

21-069
DRAWING No

SHEET 2 OF 36

SEAL/SIGNATURE/DATE

WALTER A. TILLIT JR. LICENSE No. 44167 STATE OF FLORIDA PROFESSIONAL ENGINEER

# HR-251DG IMPACT RESISTANT CAPTURED CURTAIN WALL SYSTEM COMPONENTS (CONTINUED)

SCALE : 1/4" = 1" (EXCEPT AS NOTED)

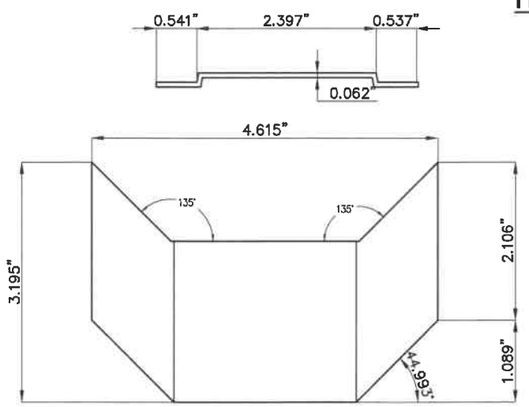


36 90 DEG. MULLION END CAP HR-FP-8

SCALE : 1/2" = 1"

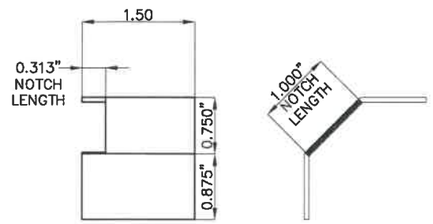


37 WATER DIVERTER HR-FP-12

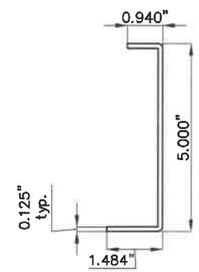


39 WALL JAMB SPLICE FEMALE HALF HR-FP-14

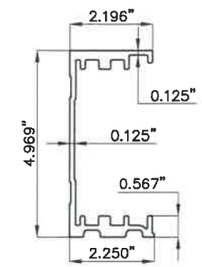


40 HEAD ANCHOR SLEEVE HR-FP-15

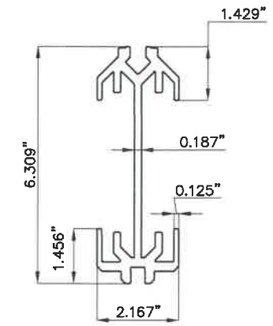


41 HEAD ANCHOR SLEEVE CORNER HR-FP-17

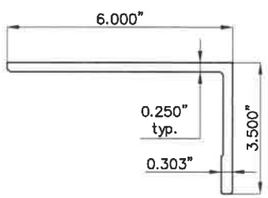


42 HEAD ANCHOR LEFT HR-FP-24

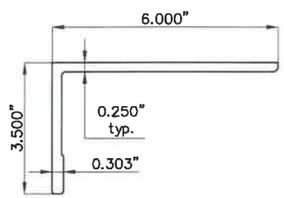


42A HEAD ANCHOR RIGHT HR-FP-25

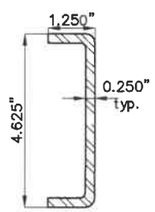


50 STEEL REINFORCING FG5000-PP-8

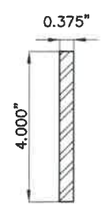


51 STEEL REINFORCING RS-16

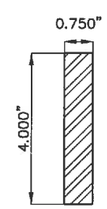


52 STEEL REINFORCING RS-17

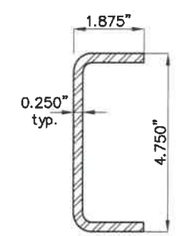


53 STEEL REINFORCING RS-25

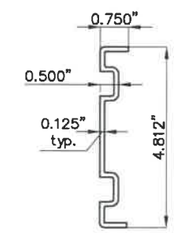


55 WALL JAMB SPLICE MALE HALF HR-FP-18

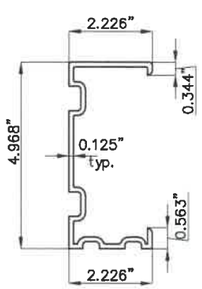


63 MULLION SPLICE HR-FP-20

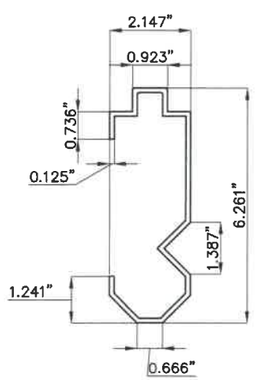


64 CORNER SPLICE HR-FP-21

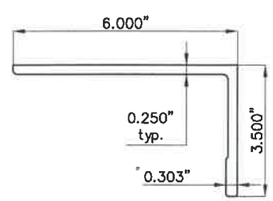


65 HEAD ANCHOR CORNER LEFT HR-FP-22

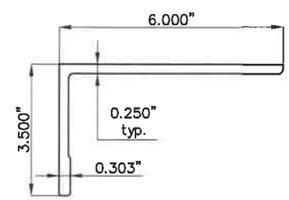


66 HEAD ANCHOR CORNER RIGHT HR-FP-23

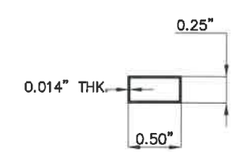


67 INSULATED GLASS SPACER

SCALE :N.T.S

FLORIDA BUILDING CODE (High & Non High Velocity Hurricane Zone)

©2021 TILTECO, INC

TILTECO INC.
TILLIT TESTING & ENGINEERING COMPANY
6355 N.W. 36th. St., Ste. 305, VIRGINIA GARDENS, FLORIDA 33166
Phone : (305)871-1530 , Fax : (305)871-1531
e-mail: tilteco@aol.com
CA-0006719
WALTER A. TILLIT Jr., P.E.
FLORIDA Lic. # 44167

HR-251DG CAPTURED DRY GLAZED CURTAIN WALL SYSTEM LARGE MISSILE IMPACT INSULATED GLASS

Oldcastle BuildingEnvelope™
803 Airport Rd - Terrell, TX 75160
www.OldcastleBE.com - Phone 800-869-4567

| REV. No | DESCRIPTION | DATE | REV. No | DESCRIPTION | DATE |
|---|---|---|---|---|---|
| 1 | - | - | 3 | - | - |
| 2 | - | - | 4 | - | - |

F.R.L
DRAWN BY

04/15/2021
DATE

21-069
DRAWING No

SHEET 3 OF 36

WALTER A. TILLIT JR. LICENSE No. 44167 STATE OF FLORIDA PROFESSIONAL ENGINEER

P.E. SEAL/SIGNATURE/DATE

# BILL OF MATERIALS

| ITEM No. | PART NUMBER | DESCRIPTION | DIMENSIONS | MATERIAL | MANUFACTURER | NOTES |
|---|---|---|---|---|---|---|
| 1. | GP-118 | EXTERIOR GLAZING GASKET | .342" X .450" | VINYL | EPG | 70 DUROMETER, USE AT G3, G3T |
| 1A. | 5607 | EXTERIOR GLAZING GASKET | .190" SPACE | VINYL | VARIES | 70 DUROMETER, USE AT G3, G3T |
| 2. | GP-1015 | INTERIOR SPACER DRY GLAZE GASKET | .514" X .962" | COEXTRUDED VINYL | VARIES | 70 DUROMETER, USE AT G3, G3T |
| 2A. | 5606 | INTERIOR SPACER DRY GLAZE GASKET | .260 X .896" | VINYL | VARIES | 70 DUROMETER, USE AT G3, G3T |
| 3. | DOW 995 | STRUCTURAL SILICONE | FILL SPACE | SILICONE | DOW CORNING | |
| 4. | GP-103 | EXTERIOR PERIMETER GASKET | .250" X .470" | VINYL | EPG | 60 DUROMETER |
| 5. | CW-6H | THERMAL ISOLATOR | .625" X .421" | RIGID VINYL | OLDCASTLE BUILDINGENVELOPE | |
| 6. | CW-2102 | SETTING BLOCK | 1.250" X .188" X 4" LONG | EPDM | EPG | 80-90 DUROMETER |
| 7. | DOW 795 | PERIMETER SEALANT | FILL SPACE | SILICONE | DOW CORNING | |
| 8. | FS-8 | ASSEMBLY SCREW | #14 X 1" HHSTS (STALGARD COATED BY ELCO) | STEEL | ELCO | |
| 9. | FS-7 | ASSEMBLY SCREW | #10 X 3/4" PFH TYPE B | STEEL | VARIES | (2)@ EA. HORIZ. 12" O.C.@ 2PC JAMB |
| 10. | FS-322 | PRESSURE PLATE SCREW | #12-14 X 1" HWH (STALGARD COATED BY ELCO) | STEEL | ELCO | 1-1/2" E.E. @ 12" O.C. |
| 11. | CW-2 | FACE CAP | .515" X 2.5" X .050" | 6063-T6 ALUMINUM | OLDCASTLE BUILDINGENVELOPE | |
| 12. | ZG-60 | 2 1/2" PRESSURE BAR | 2.40" X .450" X .094" | 6063-T6 ALUMINUM | OLDCASTLE BUILDINGENVELOPE | SEE NOTE: #1 |
| 13. | HR-FP-16 | JAMB HEAD ANCHOR SLEEVE | 2 3/16" X 5 5/16" X 5 1/8" LONG | 6063-T6 ALUMINUM | OLDCASTLE BUILDINGENVELOPE | USED @ JAMBS |
| 14. | CW-2023 | MULLION | 2.50" X 6.987" X .094" | 6063-T6 ALUMINUM | OLDCASTLE BUILDINGENVELOPE | |
| 15. | CW-1996 | MULLION FILLER | .804" X 4.734" X .070" | 6063-T6 ALUMINUM | OLDCASTLE BUILDINGENVELOPE | |
| 16. | CW-2024 | HEAD/SILL | 2.39" X 6.862" X .094" | 6063-T6 ALUMINUM | OLDCASTLE BUILDINGENVELOPE | |
| 17. | CW-1998 | HEAD/SILL TRIM | 2.50" X 5.219" X .078" | 6063-T6 ALUMINUM | OLDCASTLE BUILDINGENVELOPE | |
| 18. | CW-2182 | HEAVY MULLION | 2.50" X 6.987" X .094" | 6063-T6 ALUMINUM | OLDCASTLE BUILDINGENVELOPE | |
| 19. | CW-2156 | HORIZONTAL | 2.39" X 6.847" X .094" | 6063-T6 ALUMINUM | OLDCASTLE BUILDINGENVELOPE | |
| 20. | CW-2026 | TWO PIECE JAMB FEMALE HALF | 2.40" X 6.975" X .094" | 6063-T6 ALUMINUM | OLDCASTLE BUILDINGENVELOPE | |
| 21. | CW-2002 | TWO PIECE JAMB MALE HALF | 1.203" X 5.25" X .094" | 6063-T6 ALUMINUM | OLDCASTLE BUILDINGENVELOPE | |
| 22. | CW-2183 | CORNER PRESSURE PLATE | 1.884" X 5.401" X .125" | 6063-T6 ALUMINUM | OLDCASTLE BUILDINGENVELOPE | |
| 23. | CW-2188 | CORNER FACE CAP | .546" X 4.062" X .062" | 6063-T5 ALUMINUM | OLDCASTLE BUILDINGENVELOPE | |
| 24. | CW-691 | POCKET FILLER | .938" X 1.594" X .094" | 6063-T5 ALUMINUM | OLDCASTLE BUILDINGENVELOPE | |
| 25. | CW-2018 | CORNER MULLION FEMALE HALF | 1.724" X 7.094" X .140" | 6063-T6 ALUMINUM | OLDCASTLE BUILDINGENVELOPE | |
| 26. | CW-2019 | CORNER MULLION MALE HALF | 1.724" X 7.094" X .140" | 6063-T6 ALUMINUM | OLDCASTLE BUILDINGENVELOPE | |
| 27. | CW-2020 | CORNER MULLION FILLER | 1.302" X 2.50" X .078" | 6063-T5 ALUMINUM | OLDCASTLE BUILDINGENVELOPE | |
| 28. | D-226 | DOOR JAMB | 1.00" X 5.00" X .094" | 6063-T6 ALUMINUM | OLDCASTLE BUILDINGENVELOPE | |
| 28A. | D-231 | SUB-FRAME HEADER | 1.00" X 5.00" X .094" | 6063-T6 ALUMINUM | OLDCASTLE BUILDINGENVELOPE | |
| 29. | CW-709 | 3-1/2" FACE CAP | 3.50" X .527" X .062" | 6063-T6 ALUMINUM | OLDCASTLE BUILDINGENVELOPE | |
| 30. | CW-2722 | 3-1/2" PRESSURE PLATE | 3.40" X .450" X .094" | 6063-T6 ALUMINUM | OLDCASTLE BUILDINGENVELOPE | |
| 31. | CW-2720 | EXPANSION HORIZONTAL TOP HALF | 1.625" X 6.957" X .094" | 6063-T6 ALUMINUM | OLDCASTLE BUILDINGENVELOPE | |
| 32. | CW-2721 | EXPANSION HORIZONTAL BOTTOM HALF | 1.125" X 5.219" X .094" | 6063-T6 ALUMINUM | OLDCASTLE BUILDINGENVELOPE | |

NOTE #1: ALL VERTICALS PRESSURE PLATES SHALL BE CUT ¼" SHORT IN LENGTH TO ALLOW FOR WEEP SLOT

FLORIDA BUILDING CODE (High & Non High Velocity Hurricane Zone)

HR-251DG CAPTURED DRY GLAZED CURTAIN WALL SYSTEM LARGE MISSILE IMPACT INSULATED GLASS

F.R.L DRAWN BY

04/15/2021 DATE

21-069 DRAWING No

SHEET 4 OF 36

Oldcastle BuildingEnvelope™
803 Airport Rd - Terrell, TX 75160
www.OldcastleBE.com - Phone 800-869-4567

| REV. No | DESCRIPTION | DATE | REV. No | DESCRIPTION | DATE |
|---|---|---|---|---|---|
| 1 | - | - | 3 | - | - |
| 2 | - | - | 4 | - | - |

©2021 TILTECO, INC

TILTECO INC.
TILLIT TESTING & ENGINEERING COMPANY
6355 N.W. 36th. St., Ste. 305, VIRGINIA GARDENS, FLORIDA 33166
Phone : (305)871-1530 , Fax : (305)871-1531
e-mail: tilteco@aol.com
CA-0006719
WALTER A. TILLIT Jr., P.E.
FLORIDA Lic. # 44167

WALTER A. TILLIT JR. LICENSE No. 44167 STATE OF FLORIDA PROFESSIONAL ENGINEER

P.E. SEAL/SIGNATURE/DATE

# BILL OF MATERIALS (CONTINUED)

| ITEM No. | PART NUMBER | DESCRIPTION | DIMENSIONS | MATERIAL | MANUFACTURER | NOTES |
|---|---|---|---|---|---|---|
| 33. | HR-FP-4 | MULLION END CAPS/WATER DIVERTER | 3.5 X 2.00 X .062 | RIGID VINYL | OLDCASTLE BUILDINGENVELOPE | SEE NOTE # 2 BELOW |
| 34. | HR-FP-5 | LEFT AND RIGHT JAMB END CAPS/WATER DIVERTER | 2.96 X 0.78 X .062 | RIGID VINYL | OLDCASTLE BUILDINGENVELOPE | SEE NOTE # 2 BELOW |
| 36. | HR-FP-8 | 90 DEG MULLION END CAP | 4.615 X 3.195 X .062 | RIGID VINYL | OLDCASTLE BUILDINGENVELOPE | TOP & BOTTOM OF MULLION SEE NOTE # 2 BELOW |
| 37. | HR-FP-12 | WATER DIVERTER | 1.50 X 1.00 X .062 | RIGID VINYL | OLDCASTLE BUILDINGENVELOPE | 1.50 LONG SEE NOTE # 2 BELOW |
| 39. | HR-FP-14 | TWO PART WALL JAMB SPLICE FEMALE HALF | 5.00 X 1.484 X .125 X 6" LONG | 6063-T6 ALUMINUM | OLDCASTLE BUILDINGENVELOPE | AT (2) PART JAMB CASE: 20 + 21 |
| 40. | HR-FP-15 | HEAD ANCHOR SLEEVE | 2 3/16" X 4 15/16" X X 2 1/2" LONG | 6063-T6 ALUMINUM | OLDCASTLE BUILDINGENVELOPE | |
| 41. | HR-FP-17 | HEAD ANCHOR SLEEVE CORNER | 2 3/16" X 6 3/16" X 3" LONG | 6063-T6 ALUMINUM | OLDCASTLE BUILDINGENVELOPE | USED @ JAMBS |
| 42. | HR-FP-24 | HEAD ANCHOR LEFT | 3 1/2" x 6" x 4 1/4" LONG | 6063-T6 ALUMINUM | OLDCASTLE BUILDINGENVELOPE | |
| 42A. | HR-FP-25 | HEAD ANCHOR RIGHT | 3 1/2" x 6" x 4 1/4" LONG | 6063-T6 ALUMINUM | OLDCASTLE BUILDINGENVELOPE | |
| 43. | FASTENER | ANCHOR BOLT | 5/8"-11 X 4 1/2" SAE GRD 5 BOLT, HEX NUT AND WASHER | STEEL | VARIES | ZINC COATED, PER ASTM B-633 |
| 44. | ** | STEEL DEADLOAD ANCHOR | 4" X 6" X 5/16" X 5" LONG | A36 STEEL | VARIES | ZINC COATED, PER ASTM B-633. |
| 45. | ** | SLIP PAD | 4" X 4" X .063 | VINYL | KORALATH | USED @ MID POINT ANCHORS |
| 46. | FASTENER | PERIMETER ANCHOR | 3/8"-13 X 2" TYP F BOLT | STEEL | VARIES | ZINC COATED, PER ASTM B-633. |
| 47. | ** | STEEL DEADLOAD ANCHOR @ CORNER | 4" X 8" X 1/4" X 5" LONG | A36 STEEL | VARIES | |
| 48. | FASTENER | STEEL REINFORCING ATTACHMENT BOLT | 1/4"-20 X 2" BOLT WITH WASHER AND NUT | STEEL | VARIES | ZINC COATED, PER ASTM B-633 |
| 49. | SM-5601 | JOINT SEALANT TAPE | .125" X .750" X VARIES | BUTYL | SCHNEE-MOREHEAD | |
| 50. | FG5000-PP-8 | REINFORCING STEEL | 4 5/8" X 1 1/4" X 1/4" CHANNEL | A36 STEEL | VARIES | USED @ VERT. CORNER MULLION, COAT ZINC RICH PRIMER |
| 51. | RS-16 | STEEL REINFORCING INCLUDES RS-25 | 3/8" X 4" STEEL BAR RS-25 WELDED EVERY 18" WITH 2"X 3/32" WELDS | A36 STEEL | VARIES | USED @ VERT. MULLION COAT ZINC RICH PRIMER, 76" LONG |
| 52. | RS-17 | STEEL REINFORCING INCLUDES RS-25 | 3/4" X 4" STL. BAR WITH RS-25 | A36 STEEL | VARIES | |
| 53. | RS-25 | REINFORCING STEEL | 4 3/4" X 1 7/8" X 1/4" CHANNEL | A36 STEEL | VARIES | COAT ZINC RICH PRIMER |
| 55. | HR-FP-18 | TWO PART WALL JAMB SPLICE MALE HALF | .75" X 4.812" X .125" | 6063-T6 ALUMINUM | OLDCASTLE BUILDINGENVELOPE | AT (2) PART JAMB CASE |
| 59. | FASTENER | ATTACHMENT BOLT | 1/4"-20 X 2 1/4" BOLT WITH WASHER AND NUT | STEEL | VARIES | |
| 60. | FASTENER | ATTACHMENT BOLT | 1/4"-20 X 3" SAE GRADE 5 BOLT WITH WASHER AND NUT | STEEL | VARIES | THROUGH-BOLT @ INT HORIZONTALS |
| 63. | HR-FP-20 | MULLION AND STANDARD JAMB SPLICE | 2.16" X 4.96" X .125"X 6" LONG | 6063-T6 ALUMINUM | OLDCASTLE BUILDINGENVELOPE | |
| 64. | HR-FP-21 | CORNER MULLION SPLICE | 2.147" X 6.314" X .125" | 6063-T6 ALUMINUM | OLDCASTLE BUILDINGENVELOPE | |
| 65. | HR-FP-22 | CORNER HEAD ANCHOR LEFT | 2.147" X 6.314" X .25" | 6063-T6 ALUMINUM | OLDCASTLE BUILDINGENVELOPE | |
| 66. | HR-FP-23 | CORNER HEAD ANCHOR RIGHT | 2.147" X 6.314" X .25" | 6063-T6 ALUMINUM | OLDCASTLE BUILDINGENVELOPE | |
| 67. | INSULATED GLASS SPACER | RECTANGULAR ALUMINUM TUBE | SEE COMPONENT DETAIL | 3105-H24 ALUM. ALLOY | OLDCASTLE BUILDINGENVELOPE | |

** NO PART NUMBER ASSIGNED
NOTE #2-BEAD OF DOW CORNING 995 SILICONE SHALL BE APPLIED TO FRAME SURFACE BEFORE PART IS INSTALLED

FLORIDA BUILDING CODE (High & Non High Velocity Hurricane Zone)

HR-251DG CAPTURED DRY GLAZED CURTAIN WALL
SYSTEM LARGE MISSILE IMPACT INSULATED GLASS

F.R.L
DRAWN BY

04/15/2021
DATE

21-069
DRAWING No

SHEET 5 OF 36

Oldcastle BuildingEnvelope™
803 Airport Rd - Terrell, TX 75160
www.OldcastleBE.com - Phone 800-869-4567

| REV. No | DESCRIPTION | DATE | REV. No | DESCRIPTION | DATE |
|---|---|---|---|---|---|
| 1 | - | - | 3 | - | - |
| 2 | - | - | 4 | - | - |

©2021 TILTECO, INC

TILTECO INC.
TILLIT TESTING & ENGINEERING COMPANY
6355 N.W. 36th. St., Ste. 305, VIRGINIA GARDENS, FLORIDA 33166
Phone : (305)871-1530 . Fax : (305)871-1531
e-mail: tilteco@aol.com
CA-0006719
WALTER A. TILLIT Jr., P.E.
FLORIDA Lic. # 44167

P.E. SEAL/SIGNATURE/DATE

WALTER A. TILLIT JR. LICENSE No. 44167 STATE OF FLORIDA PROFESSIONAL ENGINEER

# ISOMETRIC ELEVATION FOR HR-251DG IMPACT RESISTANT CAPTURED CURTAIN WALL SYSTEM

N.T.S.

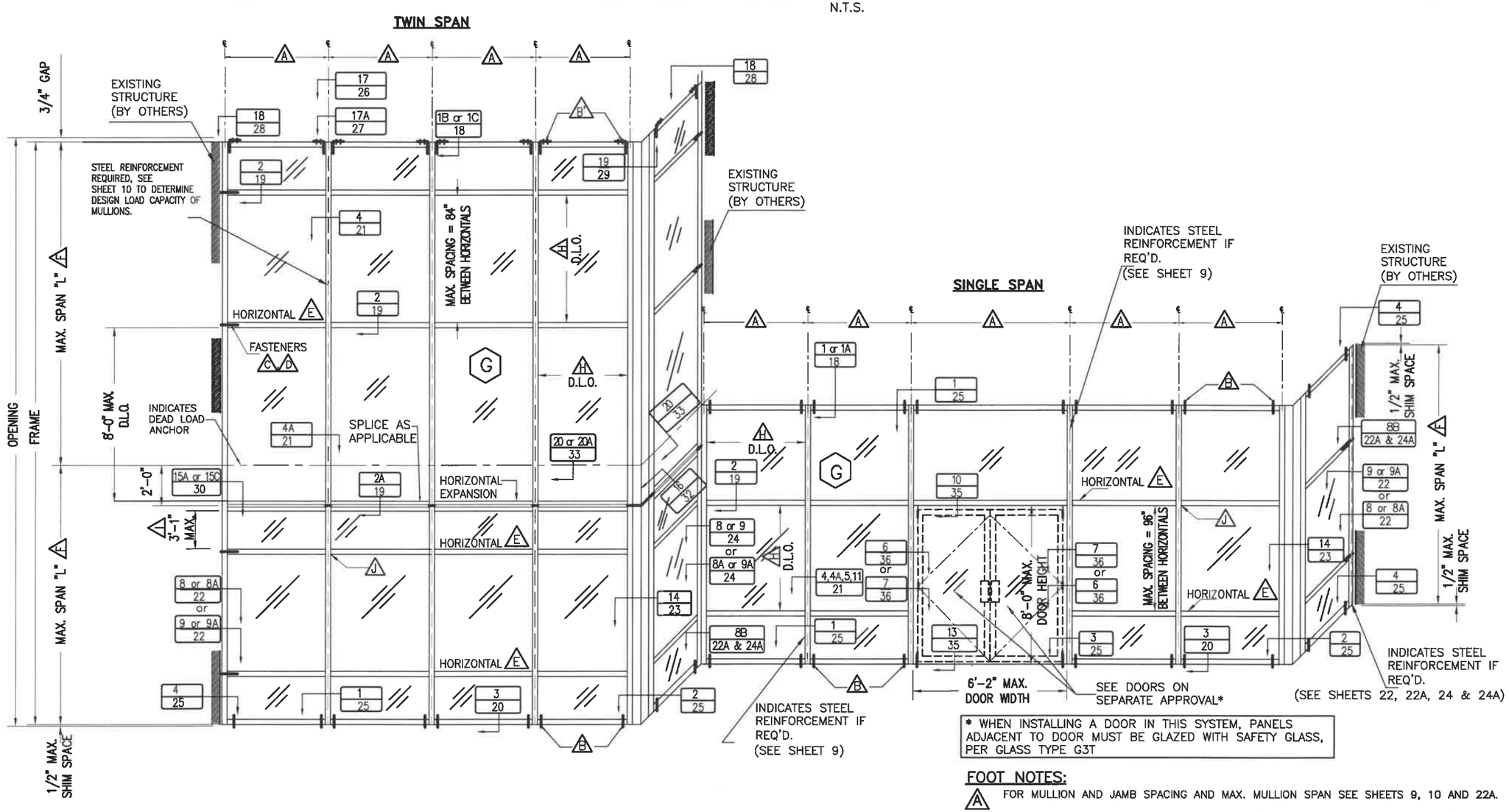


* WHEN INSTALLING A DOOR IN THIS SYSTEM, PANELS ADJACENT TO DOOR MUST BE GLAZED WITH SAFETY GLASS, PER GLASS TYPE G3T

## FOOT NOTES:

- (A) FOR MULLION AND JAMB SPACING AND MAX. MULLION SPAN SEE SHEETS 9, 10 AND 22A.
- (B) FOR HEAD (AT SINGLE SPAN CASE) AND SILL (AT SINGLE AND TWIN SPAN CASES), FASTENERS QUANTITY, TYPES AND SPECS SEE SHEET 12.
- (B') FOR HEAD (AT TWIN SPAN), FASTENERS QUANTITY, TYPES AND SPECS SEE SHEET 13.
- (C) FOR JAMB FASTENERS QUANTITY, TYPES AND SPECS SEE SHEETS 14 THRU 17.
- (D) SEE SHEETS 14 THRU 17 FOR MAXIMUM A.S.D DESIGN PRESSURE RATING FOR JAMBS CONNECTED TO EXISTING STRUCTURE.
- (E) USE OF HORIZONTALS (SEE SECTION 2/19 AND 2A/19) DESIGN LOADS FOR LIMITATIONS.
- (F) FOR MAXIMUM MULLION AND JAMB SPAN SEE SHEETS 9, 10 AND 22A.
- (G) FOR GLAZING DETAILS AND GLASS SCHEDULE SEE SHEET 7.
- (H) FOR MAXIMUM D.L.O. SEE SCHEDULE ON SHEET 8.
- (I) 3 1/2" EXPANSION HORIZONTAL SHALL ALWAYS BE ACCOMPANIED BY A 2 1/2"HORIZONTAL BELOW IT @ 37" MAXIMUM DISTANCE.
- (J) SEE SHEET 20A FOR SEALING DETAILS.

**FLORIDA BUILDING CODE (High & Non High Velocity Hurricane Zone)**

©2021 TILTECO, INC

TILTECO INC.
TILLIT TESTING & ENGINEERING COMPANY
6355 N.W. 36th. St., Ste. 305, VIRGINIA GARDENS, FLORIDA 33166
Phone : (305)871-1531 . Fax : (305)871-1530
e-mail: tilteco@aol.com
CA-0006719
WALTER A. TILLIT Jr., P.E.
FLORIDA Lic. # 44167

| REV. No | DESCRIPTION | DATE | REV. No | DESCRIPTION | DATE |
|---|---|---|---|---|---|
| 1 | - | - | 3 | - | - |
| 2 | - | - | 4 | - | - |

Oldcastle BuildingEnvelope™
803 Airport Rd - Terrell, TX 75160
www.OldcastleBE.com - Phone 800-869-4567

HR-251DG CAPTURED DRY GLAZED CURTAIN WALL SYSTEM LARGE MISSILE IMPACT INSULATED GLASS

F.R.L DRAWN BY

04/15/2021 DATE

21-069 DRAWING No

SHEET 6 OF 36

SEAL/SIGNATURE/DATE

WALTER A. TILLIT JR. LICENSE No. 44167 STATE OF FLORIDA PROFESSIONAL ENGINEER

# TYPICAL GLAZING DETAILS

* USE 13/16" MIN. GLASS BITE AT CORNER MULLION LOCATIONS (SEE SHEETS 25 AND 32)

SCALE 1/8" = 1"

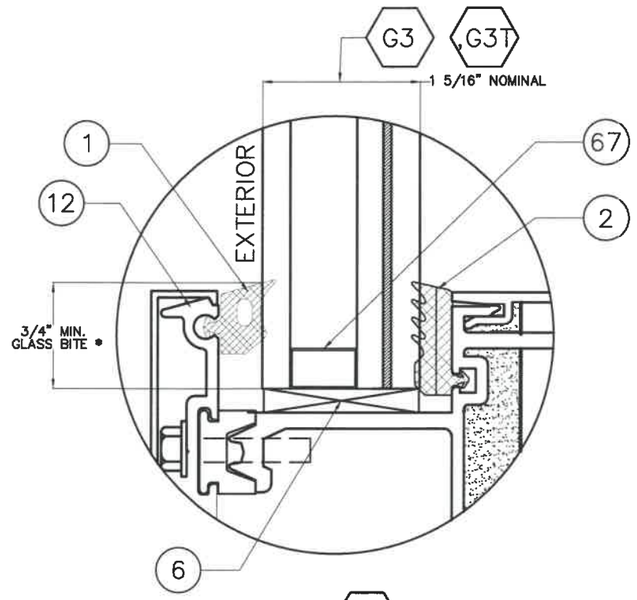


GLASS TYPE G3

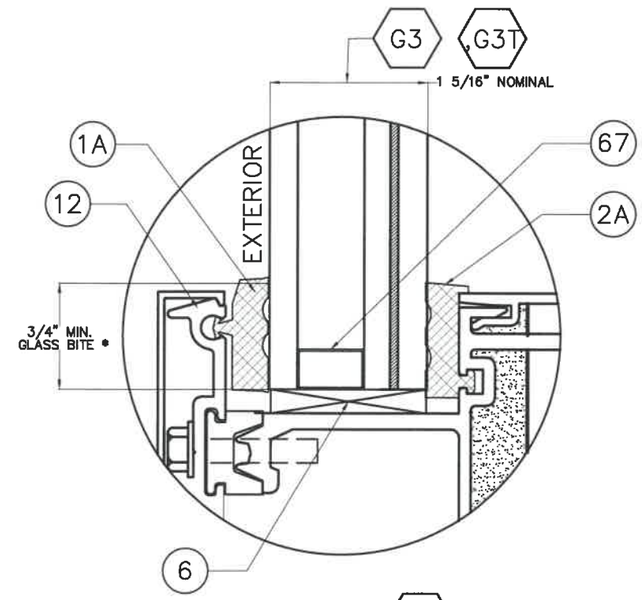


GLASS TYPES G14

## GLASS SCHEDULE

| GLASS LABEL | GLASS COMPOSITION | MANUFACTURER NAME | MAX. D.L.O. | MISSILE TYPE |
|---|---|---|---|---|
| G3 | 1 5/16" NOMINAL INSULATED GLASS CONSISTING OF 1/4" EXTERIOR HS. – 1/2" AIR SPACE – 1/4" H.S. GLASS .090 SENTRYGLAS INTERLAYER OVER 1/4" H.S. | KURARAY AMERICA INC. | SEE SCHEDULE ON SHEET 8 | LARGE MISSILE IMPACT |
| GT3 | 1 5/16" NOMINAL INSULATED GLASS CONSISTING OF 1/4" EXTERIOR TEMPERED – 1/2" AIR SPACE – 1/4" H.S GLASS, 0.090 SENTRYGLAS INTERLAYER OVER 1/4" H.S | KURARAY AMERICA INC. | SEE SCHEDULE ON SHEET 8 | LARGE MISSILE IMPACT |

FLORIDA BUILDING CODE (High & Non High Velocity Hurricane Zone)

HR-251DG CAPTURED DRY GLAZED CURTAIN WALL SYSTEM LARGE MISSILE IMPACT INSULATED GLASS

F.R.L DRAWN BY

04/15/2021 DATE

21–069 DRAWING No

SHEET 7 OF 36

Oldcastle BuildingEnvelope™
803 Airport Rd - Terrell, TX 75160
www.OldcastleBE.com - Phone 800-869-4567

| REV. No | DESCRIPTION | DATE | REV. No | DESCRIPTION | DATE |
|---|---|---|---|---|---|
| 1 | - | - | 3 | - | - |
| 2 | - | - | 4 | - | - |

©2021 TILTECO, INC

TILTECO INC.
TILLIT TESTING & ENGINEERING COMPANY
6355 N.W. 36th. St. Ste. 305, VIRGINIA GARDENS, FLORIDA 33166
Phone : (305)871–1530 . Fax : (305)871–1531
e–mail: tilteco@aol.com
CA–0006719
WALTER A. TILLIT Jr., P.E.
FLORIDA Lic. # 44167

WALTER A. TILLIT JR. LICENSE No. 44167 STATE OF FLORIDA PROFESSIONAL ENGINEER

P.E. SEAL/SIGNATURE/DATE

# MAXIMUM FRAME WIDTH "a" AND FRAME LENGTH "b" VERSUS A.S.D. DESIGN PRESSURE RATING (psf) SCHEDULE *

| GLASS TYPE G3 & G3T | | |
|---|---|---|
| DIMENSION "a" | DIMENSION "b" | MAXIMUM A.S.D. DESIGN PRESSURE RATING(psf) |
| 24" | from 24" to 101" | ±70.0 |
| 30" | from 30" to 101" | ±70.0 |
| 36" | from 36" to 101" | ±70.0 |
| 42" | from 42" to 101" | ±70.0 |
| 48" | from 48" to 101" | ±70.0 |
| 54" | from 54" to 101" | ±70.0 |
| 57.5" | from 57.5" to 101" | ±70.0 |
| 62.5" | from 63.5" to 101" | ±70.0 |

## DIMENSIONS LEGEND **

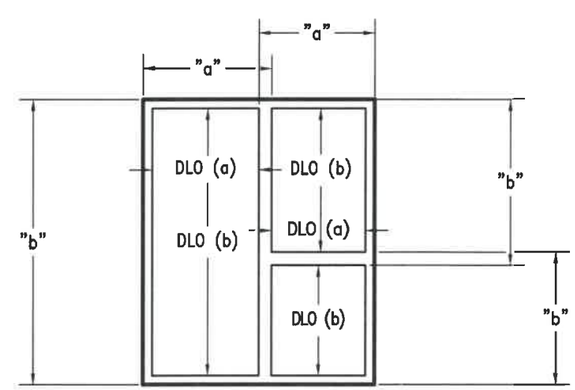


** SIDE "a" IS ALWAYS EQUAL OR SHORTER THAN "b".
"a", "b" MAY BE ORIENTED IN ANY DIRECTION.

## * DETERMINATION OF MAXIMUM DAY LIGHT OPENING (D.L.O.) AT EACH END OF GLASS GIVEN "b" & "a"

| SIDE | MAX. DAY LIGHT OPENING | |
|---|---|---|
| | (D.L.O.) Formula at vertical & jamb mullions | (D.L.O.) Formula at horizontal, head & sill frames |
| MAX. D.L.O. (a) (SHORT SIDE) | "a"−5.00" | -- |
| MAX. D.L.O. (b) (LONG SIDE) | -- | "b"−5.00" |

FLORIDA BUILDING CODE (High & Non High Velocity Hurricane Zone)

©2021 TILTECO, INC

TILTECO INC.
TILLIT TESTING & ENGINEERING COMPANY
6355 N.W. 36th. St. Ste. 305, VIRGINIA GARDENS, FLORIDA 33166
Phone : (305)871-1530 . Fax : (305)871-1531
e-mail: tilteco@aol.com
CA-0006719
WALTER A. TILLIT Jr., P.E.
FLORIDA Lic. # 44167

P.E. SEAL/SIGNATURE/DATE

WALTER A. TILLIT JR. LICENSE No. 44167 STATE OF FLORIDA PROFESSIONAL ENGINEER

HR-251DG CAPTURED DRY GLAZED CURTAIN WALL SYSTEM LARGE MISSILE IMPACT INSULATED GLASS

Oldcastle BuildingEnvelope™
803 Airport Rd - Terrell, TX 75160
www.OldcastleBE.com - Phone 800-869-4567

| REV. No | DESCRIPTION | DATE | REV. No | DESCRIPTION | DATE |
|---|---|---|---|---|---|
| 1 | - | - | 3 | - | - |
| 2 | - | - | 4 | - | - |

F.R.L. DRAWN BY

04/15/2021 DATE

21-069 DRAWING No

SHEET 8 OF 36

## HR-251DG SINGLE SPAN MULLION

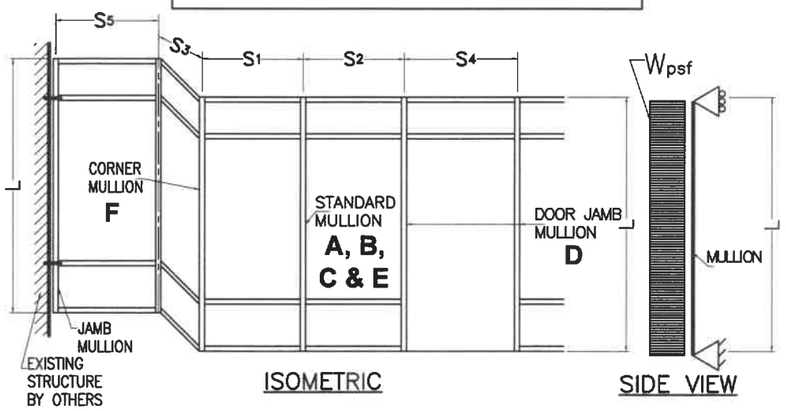


L = MULLION SPAN ; S1, S2, S3, S4 & S5 = MULLION SPACING

EFFECTIVE SPACING $b = \frac{S_1 + S_2}{2}$ (FOR STANDARD MULLION)

EFFECTIVE SPACING $b = \frac{S_1 + S_3}{2}$ (FOR CORNER MULLION)

EFFECTIVE SPACING $b = \frac{S_2 + S_4}{2}$ (FOR DOOR JAMB MULLION)

## CASE DEFINITIONS

**CASE 1 :** SINGLE SPAN UNREINFORCED STANDARD MULLION **A** (SEE DET. 5/21)

**CASE 2 :** SINGLE SPAN REINFORCED STANDARD MULLION **B** FULL HEIGHT. (SEE DET. 4/21)

**CASE 3 :** SINGLE SPAN HEAVILY REINFORCED STANDARD MULLION **C** FULL HEIGHT. (SEE DET. 4A/21)

**CASE 4 :** SINGLE SPAN UNREINFORCED STANDARD HEAVY MULLION **E** (SEE DET. 11/21)

**CASE 5 :** SINGLE SPAN REINFORCED DOOR MULLION **F** FULL HEIGHT. (SEE DET. 7/36)

**CASE 6 :** SINGLE SPAN REINFORCED CORNER MULLION **G** FULL HEIGHT. (SEE DET. 14/23)

* MAXIMUM A.S.D. DESIGN PRESSURE RATING FOR STANDARD, DOOR JAMB & CORNER MULLION WILL AUTOMATICALLY QUALIFY A.S.D. DESIGN PRESSURE RATINGS FOR JAMBS FOR ANY GIVEN MULLION SPACING. MAXIMUM JAMB SPAN (DISTANCE BETWEEN ANCHORAGE POINTS) IS 96", AND JAMB ANCHORAGE SHALL BE PERFORMED AT HORIZONTAL RAIL LOCATIONS (EXCEPT AT EXPANSION HORIZONTAL RAILS).

## MAXIMUM A.S.D. DESIGN PRESSURE RATING FOR STANDARD, DOOR JAMB & CORNER MULLIONS *
## MAXIMUM MULLION SPAN "L"(FT) SCHEDULE FOR A GIVEN A.S.D. DESIGN PRESSURE RATING (psf) AND A GIVEN MULLION EFFECTIVE SPACING "b"

| MAXIMUM A.S.D. DESIGN PRESSURE RATING | EFFECTIVE SPACING | SINGLE SPAN MULLIONS | | | | | |
|---|---|---|---|---|---|---|---|
| | | CASE 1 | CASE 2 | CASE 3 | CASE 4 | CASE 5 | CASE 6 |
| | | MULLION: A | MULLION: B | MULLION: C | MULLION: E | MULLION: F | MULLION: G |
| (psf) | "b" (ft-in) | "L" (ft-in) | "L" (ft-in) | "L" (ft-in) | "L" (ft-in) | "L" (ft-in) | "L" (ft-in) |
| 60.0 | 3'-6" | 10'-0" | 12'-6" | 12'-6" | 10'-0" | 12'-6" | 12'-6" |
| | 4'-0" | 10'-0" | 12'-6" | 12'-6" | 10'-0" | 12'-6" | 12'-6" |
| | 4'-6" | 9'-8" | 12'-6" | 12'-6" | 10'-0" | 12'-6" | 12'-6" |
| | 5'-0" | 8'-8" | 12'-6" | 12'-6" | 10'-0" | 12'-6" | 12'-6" |
| | 5'-6" | | | | | 12'-6" | |
| | 6'-0" | | | | | 12'-6" | |
| 65.0 | 3'-6" | 10'-0" | 12'-6" | 12'-6" | 10'-0" | 12'-6" | 12'-6" |
| | 4'-0" | 10'-0" | 12'-6" | 12'-6" | 10'-0" | 12'-6" | 12'-6" |
| | 4'-6" | 8'-11" | 12'-6" | 12'-6" | 10'-0" | 12'-6" | 12'-6" |
| | 5'-0" | 8'-0" | 12'-6" | 12'-6" | 10'-0" | 12'-6" | 12'-6" |
| | 5'-6" | | | | | 12'-6" | |
| | 6'-0" | | | | | 12'-6" | |
| 70.0 | 3'-6" | - | 12'-6" | 12'-6" | 10'-0" | 12'-6" | 12'-6" |
| | 4'-0" | - | 12'-6" | 12'-6" | 10'-0" | 12'-6" | 12'-6" |
| | 4'-6" | - | 12'-6" | 12'-6" | 10'-0" | 12'-6" | 12'-6" |
| | 5'-0" | - | 12'-6" | 12'-6" | 10'-0" | 12'-6" | 12'-6" |
| | 5'-6" | - | | | | 12'-6" | |
| | 6'-0" | - | | | | 12'-6" | |

**A** — CASE:1 LIGHT MULLION (14) + (15)

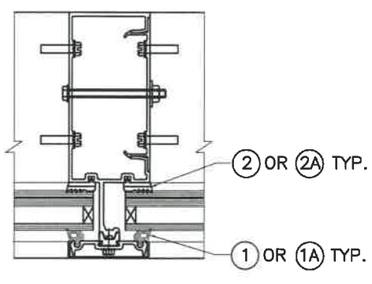


**B** — CASE:2 LIGHT MULLION (14) + (15) W/ STEEL CHANNEL (53)

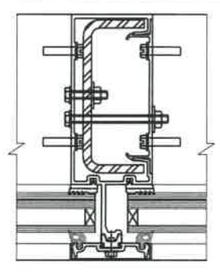

**C** — CASE:3 LIGHT MULLION (14) + (15) W/ STEEL CHANNEL (53) & 3/8"x4" STEEL BAR (51)

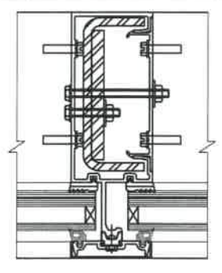

**E** — CASE:4 HEAVY MULLION (15) + (18)

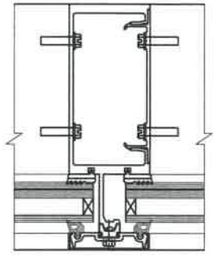

**F** — CASE:5 LIGHT MULLION (14) + (15) W/ STEEL CHANNEL (53) & 3/4"x4" STEEL BAR (52)

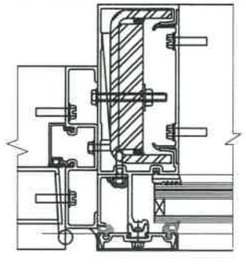

**G** — CASE:6 CORNER MULLION (25) + (26) W/ STEEL CHANNEL (50)

Ix= 31.499 in4
Sx= 7.4308 in3
IN TERMS OF ALUM.

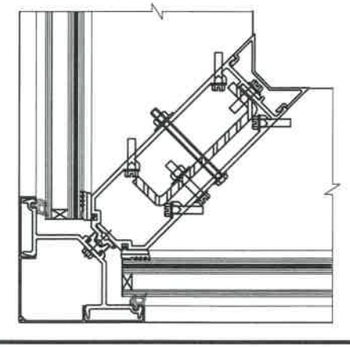

FLORIDA BUILDING CODE (High & Non High Velocity Hurricane Zone)

HR-251DG CAPTURED DRY GLAZED CURTAIN WALL SYSTEM LARGE MISSILE IMPACT INSULATED GLASS

F.R.L DRAWN BY | 04/15/2021 DATE | 21-069 DRAWING No | SHEET 9 OF 36


Oldcastle BuildingEnvelope™
803 Airport Rd - Terrell, TX 75160
www.OldcastleBE.com - Phone 800-869-4567


| REV. No | DESCRIPTION | DATE | REV. No | DESCRIPTION | DATE |
|---|---|---|---|---|---|
| 1 | - | - | 3 | - | - |
| 2 | - | - | 4 | - | - |

©2021 TILTECO, INC


TILTECO INC.
TILLIT TESTING & ENGINEERING COMPANY
6355 N.W. 36th. St. Ste. 305, VIRGINIA GARDENS, FLORIDA 33166
Phone : (305)871-1530 , Fax : (305)871-1531
e-mail: tilteco@aol.com
CA-0006719
WALTER A. TILLIT Jr., P.E.
FLORIDA Lic. # 44167


WALTER A. TILLIT JR. LICENSE No. 44167 STATE OF FLORIDA PROFESSIONAL ENGINEER

P.E. SEAL/SIGNATURE/DATE

# HR-251DG TWIN SPAN MULLION

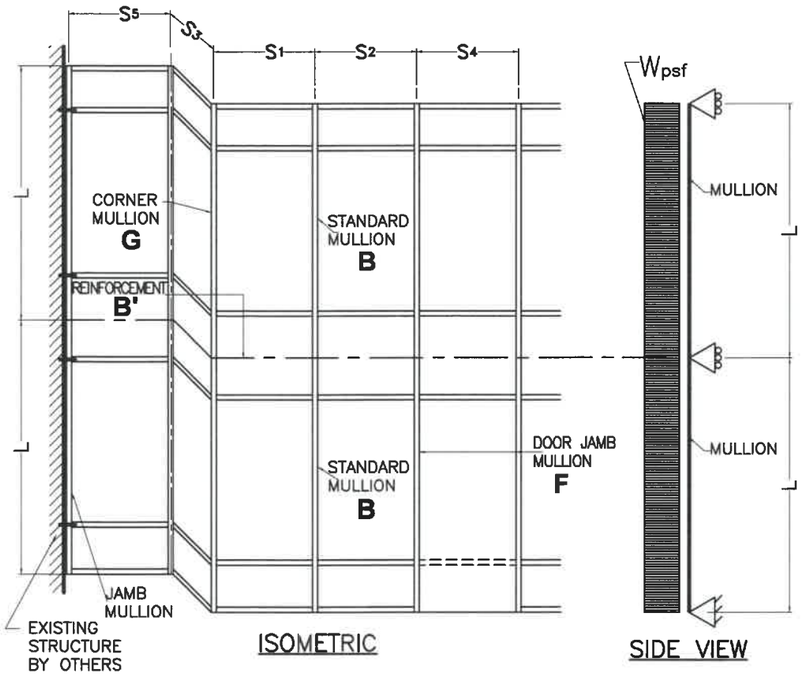


ISOMETRIC

SIDE VIEW

## CASE DEFINITIONS

**CASE 7 :** TWIN SPAN REINFORCED STANDARD MULLION **B** FULL HEIGHT. (SEE DET. 4/21) W/ REQUIRED 76" LONG ADDITIONAL REINFORCEMENT **B'** AT DEAD AND WIND LOAD ANCHOR LOCATION SEE SHEET 11.

**CASE 8 :** TWIN SPAN REINFORCED CORNER MULLION **G** FULL HEIGHT. (SEE DET. 14/23)

**CASE 9 :** REINFORCED DOOR JAMB MULLION **F** FULL HEIGHT. (SEE DET. 7/36)

L = MULLION SPAN ; $S_1$, $S_2$, $S_3$, $S_4$ & $S_5$ = MULLION SPACING

EFFECTIVE SPACING $b = \frac{S_1 + S_2}{2}$ (FOR STANDARD MULLION)

EFFECTIVE SPACING $b = \frac{S_1 + S_3}{2}$ (FOR CORNER MULLION)

EFFECTIVE SPACING $b = \frac{S_2 + S_4}{2}$ (FOR DOOR JAMB MULLION)

## MAXIMUM A.S.D. DESIGN PRESSURE RATING FOR STANDARD, DOOR JAMB & CORNER MULLIONS *

## MAXIMUM MULLION SPAN "L"(FT) SCHEDULE FOR A GIVEN A.S.D. DESIGN PRESSURE RATING (psf) AND A GIVEN MULLION EFFECTIVE SPACING "b"

| MAXIMUM A.S.D. DESIGN PRESSURE RATING (p.s.f.) | EFFECTIVE SPACING "b" (ft-in) | TWIN SPAN MULLIONS CASE 7 MULLION: B "L" (ft-in) | CASE 8 ◊ MULLION: G "L" (ft-in) | CASE 9 MULLION: F "L" (ft-in) |
|---|---|---|---|---|
| 60.0 | 3 '- 6 " | 12 '- 6 " | 12 '- 6 " | 12 '- 6 " |
| | 4 '- 0 " | 12 '- 6 " | 12 '- 6 " | 12 '- 6 " |
| | 4 '- 6 " | 12 '- 6 " | 12 '- 6 " | 12 '- 6 " |
| | 5 '- 0 " | 12 '- 6 " | 12 '- 6 " | 12 '- 6 " |
| | 5 '- 6 " | | | 12 '- 6 " |
| 65.0 | 3 '- 6 " | 12 '- 6 " | 12 '- 6 " | 12 '- 6 " |
| | 4 '- 0 " | 12 '- 6 " | 12 '- 6 " | 12 '- 6 " |
| | 4 '- 6 " | 12 '- 6 " | 12 '- 6 " | 12 '- 6 " |
| | 5 '- 0 " | 12 '- 6 " | 12 '- 6 " | 12 '- 6 " |
| | 5 '- 6 " | | | 12 '- 6 " |
| 70.0 | 3 '- 6 " | 12 '- 6 " | 12 '- 6 " | 12 '- 6 " |
| | 4 '- 0 " | 12 '- 6 " | 12 '- 6 " | 12 '- 6 " |
| | 4 '- 6 " | 12 '- 6 " | 12 '- 6 " | 12 '- 6 " |
| | 5 '- 0 " | 12 '- 6 " | 12 '- 6 " | 12 '- 6 " |
| | 5 '- 6 " | | | 12 '- 6 " |

**B** — CASE:7 LIGHT MULLION (14) + (15) W/ STEEL CHANNEL (53)

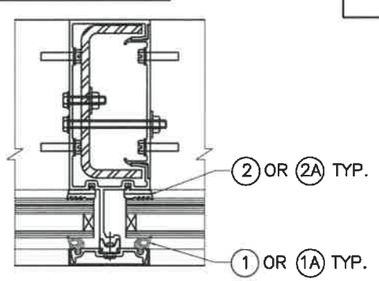


**REINFORCEMENT B'** — CASE:7' (AT DEAD LOAD & WIND ANCHOR LOCATION) FOR B WITH 3/8"x4" STEEL BAR (51)

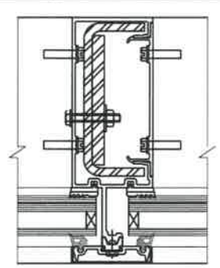

**G** — CASE:8 CORNER MULLION (25) + (26) W/ STEEL CHANNEL (50)

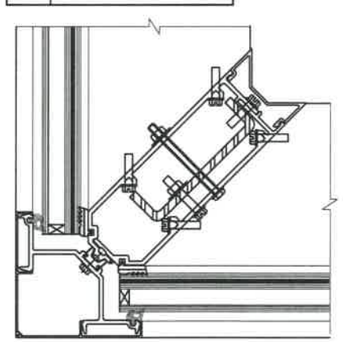

**F** — CASE:9 ◊ LIGHT MULLION (14) + (15) W/ STEEL CHANNEL (53) & 3/4"x4" STEEL BAR (52)

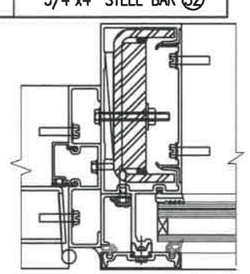

◊ THIS MULLION SHALL BE USED FULL HEIGHT, i.e. ON BOTH SPANS OF THE TWIN SPAN CONDITION.

* MAXIMUM A.S.D. DESIGN PRESSURE RATING FOR STANDARD, DOOR JAMB & CORNER MULLION WILL AUTOMATICALLY QUALIFY A.S.D. DESIGN PRESSURE RATINGS FOR JAMBS FOR ANY GIVEN MULLION SPACING. MAXIMUM JAMB SPAN (DISTANCE BETWEEN ANCHORAGE POINTS) IS 84", AND JAMB ANCHORAGE SHALL BE PERFORMED AT HORIZONTAL LOCATIONS (EXCEPT AT EXPANSION HORIZONTALS).

FLORIDA BUILDING CODE (High & Non High Velocity Hurricane Zone)

HR-251DG CAPTURED DRY GLAZED CURTAIN WALL SYSTEM LARGE MISSILE IMPACT INSULATED GLASS

F.R.L DRAWN BY | 04/15/2021 DATE | 21-069 DRAWING No | SHEET 10 OF 36

Oldcastle BuildingEnvelope™
803 Airport Rd - Terrell, TX 75160
www.OldcastleBE.com - Phone 800-869-4567

| REV. No | DESCRIPTION | DATE | REV. No | DESCRIPTION | DATE |
|---|---|---|---|---|---|
| 1 | - | - | 3 | - | - |
| 2 | - | - | 4 | - | - |

©2021 TILTECO, INC

TILTECO INC.
TILLIT TESTING & ENGINEERING COMPANY
6355 N.W. 36th. St., Ste. 305, VIRGINIA GARDENS, FLORIDA 33166
Phone : (305)871-1530 . Fax : (305)871-1531
e-mail: tilteco@aol.com
CA-0006719
WALTER A. TILLIT Jr., P.E.
FLORIDA Lic. # 44167

WALTER A. TILLIT JR. LICENSE No. 44167 STATE OF FLORIDA PROFESSIONAL ENGINEER

P.E. SEAL/SIGNATURE/DATE

# OPTIONS FOR TWIN SPAN STANDARD AND CORNER MULLIONS INSTALLATION FOR HR-251DG CURTAIN WALL SYSTEM

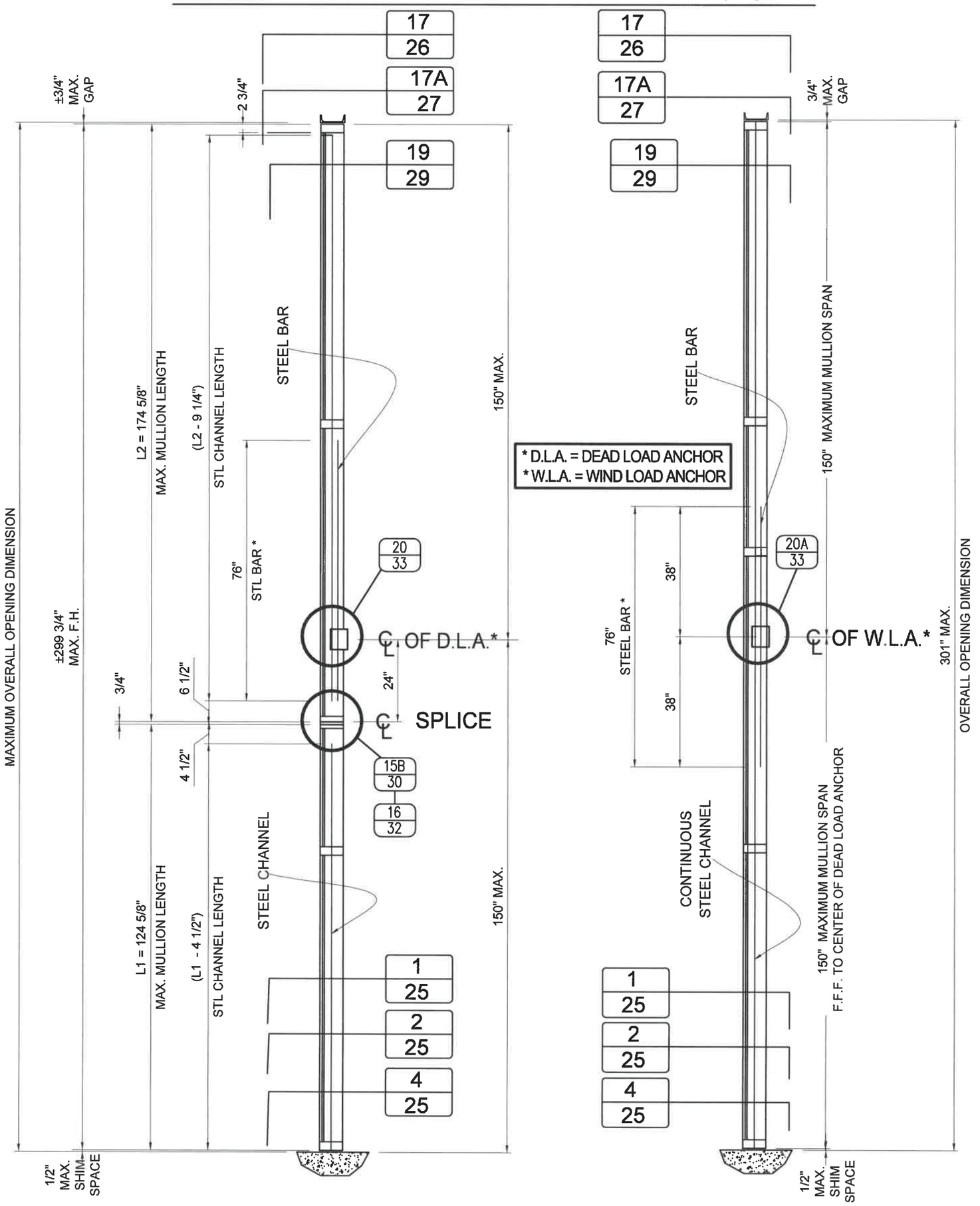


## OPTION # 1
MULLION W/ SPLICE

## OPTION # 2:
CONTINUOUS MULLION W/O SPLICE

* STEEL BAR NOT REQUIRED AT CORNER MULLION

**FLORIDA BUILDING CODE (High & Non High Velocity Hurricane Zone)**

WALTER A. TILLIT JR. LICENSE No. 44167 STATE OF FLORIDA PROFESSIONAL ENGINEER

P.E. SEAL/SIGNATURE/DATE

©2021 TILTECO, INC

TILTECO INC.
TILLIT TESTING & ENGINEERING COMPANY
6355 N.W. 36th. St., Ste. 305, VIRGINIA GARDENS, FLORIDA 33166
Phone : (305)871-1530 . Fax : (305)871-1531
e-mail: tilteco@aol.com
CA-0006719
WALTER A. TILLIT Jr., P.E.
FLORIDA Lic. # 44167

HR-251DG CAPTURED DRY GLAZED CURTAIN WALL SYSTEM LARGE MISSILE IMPACT INSULATED GLASS

Oldcastle BuildingEnvelope™
803 Airport Rd - Terrell, TX 75160
www.OldcastleBE.com - Phone 800-869-4567

| REV. No | DESCRIPTION | DATE | REV. No | DESCRIPTION | DATE |
|---|---|---|---|---|---|
| 1 | – | – | 3 | – | – |
| 2 | – | – | 4 | – | – |

F.R.L
DRAWN BY

04/15/2021
DATE

21-069
DRAWING No

SHEET 11 OF 36

# MAXIMUM A.S.D. DESIGN PRESSURE RATING FOR SINGLE SPAN & TWIN SPAN (AS APPLICABLE) MULLION CONNECTIONS (SEE ALSO SHEET 13)

| SINGLE SPAN MULLION: | | HEAD & SILL CONNECTION* | | | |
|---|---|---|---|---|---|
| MAXIMUM MULLION SPAN | EFFECTIVE SPACING | MAXIMUM A.S.D. DESIGN PRESSURE RATING (psf) | | | |
| | | POURED CONCRETE (Min. f'c = 3ksi) SUBSTRATE | | | 1/4" Min. THK ASTM A-36 STEEL SUBSTRATE |
| | | FASTENERS TYPES | | | FASTENERS |
| "L" (ft-in) | "b" (ft-in) | A | B | C | D |
| 8'-5" MAX. 12'-6" | 3'-6" | 70.0 | 70.0 | 70.0 | 70.0 |
| | 4'-0" | 70.0 | 70.0 | 70.0 | 70.0 |
| | 4'-6" | 70.0 | 70.0 | 70.0 | 70.0 |
| | 5'-0" | 70.0 | 70.0 | 70.0 | 70.0 |
| | 5'-6" | 70.0 | 70.0 | 70.0 | 70.0 |
| | 6'-0" | 70.0 | 70.0 | 70.0 | 70.0 |

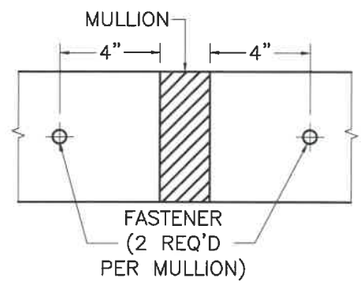


EXTERIOR

SCHEMATIC
CONNECTION DETAIL*

* SEE CONNECTION DETAILS ON SHEETS 18 & 25 FOR FASTENERS LOCATIONS AT MULLION.

| TWIN SPAN MULLION: | | SILL CONNECTION* | | | |
|---|---|---|---|---|---|
| MAXIMUM MULLION SPAN | EFFECTIVE SPACING | MAXIMUM A.S.D. DESIGN PRESSURE RATING (psf) | | | |
| | | POURED CONCRETE (Min. f'c = 3ksi) SUBSTRATE | | | 1/4" Min. THK ASTM A-36 STEEL SUBSTRATE |
| | | FASTENERS TYPES | | | FASTENERS |
| "L" (ft-in) | "b" (ft-in) | A | B | C | D |
| 8'-5" MAX. 12'-6" | 3'-6" | 70.0 | 70.0 | 70.0 | 70.0 |
| | 4'-0" | 70.0 | 70.0 | 70.0 | 70.0 |
| | 4'-6" | 70.0 | 70.0 | 70.0 | 70.0 |
| | 5'-0" | 70.0 | 70.0 | 70.0 | 70.0 |
| | 5'-6" | 70.0 | 70.0 | 70.0 | 70.0 |
| | 6'-0" | 70.0 | 70.0 | 70.0 | 70.0 |

## (B) FASTENERS TYPES REQUIREMENTS

A - 1/2"Ø HILTI KWIK BOLT TZ ANCHOR W/ 3 1/4" Min. EMBEDMENT INTO 8" Min. THICK POURED CONCRETE (Min. f'c = 3 ksi) BEYOND ANY FINISH MATERIAL, W/ 6" MIN. EDGE DISTANCE.

B - 1/2"Ø HILTI KWIK BOLT TZ ANCHOR W/ 3 1/4" Min. EMBEDMENT INTO 6" Min. THICK POURED CONCRETE (Min. f'c = 3 ksi) BEYOND ANY FINISH MATERIAL, W/ 7 1/2" MIN. EDGE DISTANCE.

C - 1/2"Ø HILTI HUS-H SCREW ANCHOR W/ 3" Min. EMBEDMENT INTO 4" Min. THICK POURED CONCRETE (Min. f'c = 3 ksi) BEYOND ANY FINISH MATERIAL, W/ 3 3/4" MIN. EDGE DISTANCE.

D - 1/2"Ø-13 TYPE "F" GRADE 5 BOLT TO 1/4" MIN. THK. ASTM A-36 STEEL W/ 1" Min. EDGE DISTANCE OR 1/2"Ø -13 SAE GALVANIZED STEEL GRADE 5 HHB THRU BOLT W/ NUT & LOCK WASHER TO 1/4" Min. THK. ASTM A-36 STEEL W/ 1" MIN. EDGE DISTANCE.

FLORIDA BUILDING CODE (High & Non High Velocity Hurricane Zone)

©2021 TILTECO, INC

TILTECO INC.
TILLIT TESTING & ENGINEERING COMPANY
6355 N.W. 36th. St. Ste. 305, VIRGINIA GARDENS, FLORIDA 33166
Phone : (305)871-1530 . Fax : (305)871-1531
e-mail: tilteco@aol.com
CA-0006719
WALTER A. TILLIT Jr., P.E.
FLORIDA Lic. # 44167

WALTER A. TILLIT JR. LICENSE No. 44167 STATE OF FLORIDA PROFESSIONAL ENGINEER

P.E. SEAL/SIGNATURE/DATE

F.R.L
DRAWN BY

04/15/2021
DATE

21-069
DRAWING No

SHEET 12 OF 36

HR-251DG CAPTURED DRY GLAZED CURTAIN WALL SYSTEM LARGE MISSILE IMPACT INSULATED GLASS

Oldcastle BuildingEnvelope™
803 Airport Rd - Terrell, TX 75160
www.OldcastleBE.com - Phone 800-869-4567

| REV. No | DESCRIPTION | DATE | REV. No | DESCRIPTION | DATE |
|---|---|---|---|---|---|
| 1 | - | - | 3 | - | - |
| 2 | - | - | 4 | - | - |

# MAXIMUM A.S.D. DESIGN PRESSURE RATING FOR TWIN SPAN MULLION HEAD ANCHOR CONNECTIONS

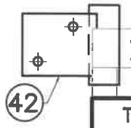


**TWIN SPAN MULLION : HEAD CONNECTION ***

**W/ (1) 6"x 3 1/2" x 4 1/4" LONG ANCHOR #61**

| TYPE 1 ** | | MAXIMUM A.S.D. DESIGN PRESSURE RATING (psf) | | | |
|---|---|---|---|---|---|
| MAXIMUM MULLION SPAN | EFFECTIVE SPACING | POURED CONCRETE (Min. f'c = 3ksi) SUBSTRATE | | | 1/4" Min. THK ASTM A-36 STEEL SUBSTRATE |
| | | FASTENERS TYPES | | | FASTENERS |
| "L" (ft-in) | "b" (ft-in) | A | B | C | D |
| | 3'-6" | 66.3 | 69.2 | 58.9 | 70.0 |
| | 4'-0" | 58.0 | 60.5 | 51.5 | 70.0 |
| 8'-5" | 4'-6" | 51.6 | 53.8 | 45.8 | 70.0 |
| | 5'-0" | 46.4 | 48.4 | 41.2 | 70.0 |
| | 5'-6" | 42.2 | 44.0 | 37.5 | 70.0 |
| | 3'-6" | 65.6 | 68.5 | 58.3 | 70.0 |
| | 4'-0" | 57.4 | 59.9 | 51.0 | 70.0 |
| 8'-6" | 4'-6" | 51.1 | 53.3 | 45.4 | 70.0 |
| | 5'-0" | 46.0 | 48.0 | 40.8 | 70.0 |
| | 5'-6" | 41.8 | 43.6 | 37.1 | 70.0 |
| | 3'-6" | 62.0 | 64.7 | 55.1 | 70.0 |
| | 4'-0" | 54.3 | 56.6 | 48.2 | 70.0 |
| 9'-0" | 4'-6" | 48.2 | 50.3 | 42.8 | 70.0 |
| | 5'-0" | 43.4 | 45.3 | 38.6 | 70.0 |
| | 5'-6" | 39.5 | 41.2 | 35.1 | 70.0 |
| | 3'-6" | 58.7 | 61.3 | 52.2 | 70.0 |
| | 4'-0" | 51.4 | 53.6 | 45.7 | 70.0 |
| 9'-6" | 4'-6" | 45.7 | 47.7 | 40.6 | 70.0 |
| | 5'-0" | 41.1 | 42.9 | 36.5 | 70.0 |
| | 5'-6" | 37.4 | 39.0 | 33.2 | 70.0 |
| | 3'-6" | 55.8 | 58.2 | 49.6 | 70.0 |
| | 4'-0" | 48.8 | 50.9 | 43.4 | 70.0 |
| 10'-0" | 4'-6" | 43.4 | 45.3 | 38.6 | 70.0 |
| | 5'-0" | 39.1 | 40.8 | 34.7 | 70.0 |
| | 5'-6" | 35.5 | 37.1 | 31.6 | 70.0 |
| | 3'-6" | 53.1 | 55.5 | 47.2 | 70.0 |
| | 4'-0" | 46.5 | 48.5 | 41.3 | 70.0 |
| 10'-6" | 4'-6" | 41.3 | 43.1 | 36.7 | 70.0 |
| | 5'-0" | 37.2 | 38.8 | 33.1 | 70.0 |
| | 5'-6" | 33.8 | 35.3 | 30.0 | 70.0 |
| | 3'-6" | 50.7 | 52.9 | 45.1 | 70.0 |
| | 4'-0" | 44.4 | 46.3 | 39.4 | 70.0 |
| 11'-0" | 4'-6" | 39.5 | 41.2 | 35.1 | 70.0 |
| | 5'-0" | 35.5 | 37.1 | 31.6 | 70.0 |
| | 5'-6" | 32.3 | 33.7 | 28.7 | 70.0 |
| | 3'-6" | 48.5 | 50.6 | 43.1 | 70.0 |
| | 4'-0" | 42.5 | 44.3 | 37.7 | 70.0 |
| 11'-6" | 4'-6" | 37.7 | 39.4 | 33.5 | 70.0 |
| | 5'-0" | 34.0 | 35.4 | 30.2 | 70.0 |
| | 5'-6" | 30.9 | 32.2 | 27.4 | 70.0 |
| | 3'-6" | 46.5 | 48.5 | 41.3 | 70.0 |
| | 4'-0" | 40.7 | 42.5 | 36.2 | 70.0 |
| 12'-0" | 4'-6" | 36.2 | 37.7 | 32.1 | 70.0 |
| | 5'-0" | 32.6 | 34.0 | 28.9 | 70.0 |
| | 5'-6" | 29.6 | 30.9 | 26.3 | 70.0 |
| | 3'-6" | 44.6 | 46.6 | 39.7 | 70.0 |
| | 4'-0" | 39.1 | 40.8 | 34.7 | 70.0 |
| 12'-6" | 4'-6" | 34.7 | 36.2 | 30.9 | 70.0 |
| | 5'-0" | 31.2 | 32.6 | 27.8 | 70.0 |
| | 5'-6" | 28.4 | 29.6 | 25.2 | 70.0 |

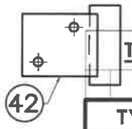


**TWIN SPAN MULLION : HEAD CONNECTION ***

**W/ (1) 6"x 3 1/2" x 4 1/4" LONG ANCHOR #61**

| TYPE 2 ** | | MAXIMUM A.S.D. DESIGN PRESSURE RATING (psf) | | | |
|---|---|---|---|---|---|
| MAXIMUM MULLION SPAN | EFFECTIVE SPACING | POURED CONCRETE (Min. f'c = 3ksi) SUBSTRATE | | | 1/4" Min. THK ASTM A-36 STEEL SUBSTRATE |
| | | FASTENERS TYPES | | | FASTENERS |
| "L" (tt-in) | "b" (ft-in) | A | B | C | D |
| | 3'-6" | 59.2 | 61.8 | 52.6 | 70.0 |
| | 4'-0" | 51.8 | 54.0 | 46.0 | 70.0 |
| 8'-5" | 4'-6" | 46.0 | 48.0 | 40.9 | 70.0 |
| | 5'-0" | 41.4 | 43.2 | 36.8 | 70.0 |
| | 5'-6" | 37.7 | 39.3 | 33.5 | 70.0 |
| | 3'-6" | 58.6 | 61.2 | 52.1 | 70.0 |
| | 4'-0" | 51.3 | 53.5 | 45.6 | 70.0 |
| 8'-6" | 4'-6" | 45.6 | 47.6 | 40.5 | 70.0 |
| | 5'-0" | 41.0 | 42.8 | 36.5 | 70.0 |
| | 5'-6" | 37.3 | 38.9 | 33.1 | 70.0 |
| | 3'-6" | 55.4 | 57.8 | 49.2 | 70.0 |
| | 4'-0" | 48.4 | 50.5 | 43.0 | 70.0 |
| 9'-0" | 4'-6" | 43.1 | 44.9 | 38.3 | 70.0 |
| | 5'-0" | 38.8 | 40.4 | 34.4 | 70.0 |
| | 5'-6" | 35.2 | 36.8 | 31.3 | 70.0 |
| | 3'-6" | 52.4 | 54.7 | 46.6 | 70.0 |
| | 4'-0" | 45.9 | 47.9 | 40.8 | 70.0 |
| 9'-6" | 4'-6" | 40.8 | 42.6 | 36.2 | 70.0 |
| | 5'-0" | 36.7 | 38.3 | 32.6 | 70.0 |
| | 5'-6" | 33.4 | 34.8 | 29.7 | 70.0 |
| | 3'-6" | 49.8 | 52.0 | 44.3 | 70.0 |
| | 4'-0" | 43.6 | 45.5 | 38.7 | 70.0 |
| 10'-0" | 4'-6" | 38.8 | 40.4 | 34.4 | 70.0 |
| | 5'-0" | 34.9 | 36.4 | 31.0 | 70.0 |
| | 5'-6" | 31.7 | 33.1 | 28.2 | 70.0 |
| | 3'-6" | 47.4 | 49.5 | 42.2 | 70.0 |
| | 4'-0" | 41.5 | 43.3 | 36.9 | 70.0 |
| 10'-6" | 4'-6" | 36.9 | 38.5 | 32.8 | 70.0 |
| | 5'-0" | 33.2 | 34.7 | 29.5 | 70.0 |
| | 5'-6" | 30.2 | 31.5 | 26.8 | 70.0 |
| | 3'-6" | 45.3 | 47.3 | 40.2 | 70.0 |
| | 4'-0" | 39.6 | 41.4 | 35.2 | 70.0 |
| 11'-0" | 4'-6" | 35.2 | 36.8 | 31.3 | 70.0 |
| | 5'-0" | 31.7 | 33.1 | 28.2 | 70.0 |
| | 5'-6" | 28.8 | 30.1 | 25.6 | 70.0 |
| | 3'-6" | 43.3 | 45.2 | 38.5 | 70.0 |
| | 4'-0" | 37.9 | 39.6 | 33.7 | 70.0 |
| 11'-6" | 4'-6" | 33.7 | 35.2 | 29.9 | 70.0 |
| | 5'-0" | 30.3 | 31.6 | 26.9 | 70.0 |
| | 5'-6" | 27.6 | 28.8 | 24.5 | 70.0 |
| | 3'-6" | 41.5 | 43.3 | 36.9 | 70.0 |
| | 4'-0" | 36.3 | 37.9 | 32.3 | 70.0 |
| 12'-0" | 4'-6" | 32.3 | 33.7 | 28.7 | 70.0 |
| | 5'-0" | 29.1 | 30.3 | 25.8 | 70.0 |
| | 5'-6" | 26.4 | 27.6 | 23.5 | 70.0 |
| | 3'-6" | 39.9 | 41.6 | 35.4 | 70.0 |
| | 4'-0" | 34.9 | 36.4 | 31.0 | 70.0 |
| 12'-6" | 4'-6" | 31.0 | 32.3 | 27.5 | 70.0 |
| | 5'-0" | 27.9 | 29.1 | 24.8 | 70.0 |
| | 5'-6" | 25.4 | 26.5 | 22.5 | 70.0 |

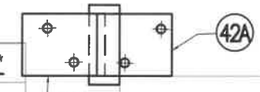


**TWIN SPAN MULLION (INCLUDING CORNER MULLION): HEAD CONNECTION ***

**W/ (2) 6"x 3 1/2" x 4 1/4" LONG ANCHOR #61**

| TYPES 1 & 2 ** | | MAXIMUM A.S.D. DESIGN PRESSURE RATING ( | | | |
|---|---|---|---|---|---|
| MAXIMUM MULLION SPAN | EFFECTIVE SPACING | POURED CONCRETE (Min. f'c = 3ksi) SUBSTRATE | | | 1/4" Min. THK ASTM A-36 STEEL SUBSTRATE |
| | | FASTENERS TYPES | | | FASTENERS |
| "L" (ft-in) | "b" (ft-in) | A | B | C | D |
| | 3'-6" | 70.0 | 70.0 | 70.0 | 70.0 |
| | 4'-0" | 70.0 | 70.0 | 70.0 | 70.0 |
| 8'-5" | 4'-6" | 70.0 | 70.0 | 70.0 | 70.0 |
| MAX. 12'-6" | 5'-0" | 70.0 | 70.0 | 70.0 | 70.0 |
| | 5'-6" | 70.0 | 70.0 | 70.0 | 70.0 |

*SEE CONNECTION DETAILS ON SHEETS 26 & 27 FOR FASTENERS LOCATIONS AT MULLION. △

**

**TYPE 1 CONNECTION:**

CORRESPONDS TO CONTINUOUS TWIN SPAN MULLION INSTALLATIONS.

**TYPE 2 CONNECTION:**

CORRESPONDS TO SPLICED TWIN SPAN MULLION INSTALLATIONS.

## Ⓑ FASTENERS TYPES REQUIREMENTS

A - 1/2"Ø HILTI KWIK BOLT TZ ANCHOR W/ 3 1/4" Min. EMBEDMENT INTO 8" Min. THICK POURED CONCRETE (Min. f'c = 3 ksi) BEYOND ANY FINISH MATERIAL, W/ 6" MIN. EDGE DISTANCE.

B - 1/2"Ø HILTI KWIK BOLT TZ ANCHOR W/ 3 1/4" Min. EMBEDMENT INTO 6" Min. THICK POURED CONCRETE (Min. f'c = 3 ksi) BEYOND ANY FINISH MATERIAL, W/ 7 1/2" MIN. EDGE DISTANCE.

C - 1/2"Ø HILTI HUS-H SCREW ANCHOR W/ 3" Min. EMBEDMENT INTO 4" Min. THICK POURED CONCRETE (Min. f'c = 3 ksi) BEYOND ANY FINISH MATERIAL, W/ 3 3/4" MIN. EDGE DISTANCE.

D - 1/2"Ø-13 TYPE "F" GRADE 5 BOLT TO 1/4" MIN. THK. ASTM A-36 STEEL W/ 1" MIN. EDGE DISTANCE OR 1/2"Ø -13 SAE GALVANIZED STEEL GRADE 5 HHB THRU BOLT W/ NUT & LOCK WASHER TO 1/4" MIN. THK. ASTM A-36 STEEL W/ 1" MIN. EDGE DISTANCE.

△ MAX. PRESSURE RATING FOR JAMB CONNECTION @ HEAD W/ ANCHOR (42) IS ± 70.0 psf FOR SINGLE SPAN CURTAIN WALL AND ±70.0 psf FOR TWIN SPAN CURTAIN WALL, VALID FOR ALL EFFECTIVE WIDTHS. SEE CONNECTION DETAILS ON SHEET 28 FOR FASTENERS LOCATION AT JAMB.

**FLORIDA BUILDING CODE (High & Non High Velocity Hurricane Zone)**

| F.R.L | 04/15/2021 | 21-069 | SHEET 13 OF 36 |
|---|---|---|---|
| DRAWN BY | DATE | DRAWING No | |

HR-251DG CAPTURED DRY GLAZED CURTAIN WALL SYSTEM LARGE MISSILE IMPACT INSULATED GLASS

**Oldcastle BuildingEnvelope™**
803 Airport Rd - Terrell, TX 75160
www.OldcastleBE.com - Phone 800-869-4567

| REV. No | DESCRIPTION | DATE | REV. No | DESCRIPTION | DATE |
|---|---|---|---|---|---|
| 1 | - | - | 3 | - | - |
| 2 | - | - | 4 | - | - |

©2021 TILTECO, INC

TILTECO INC.
TILLIT TESTING & ENGINEERING COMPANY
6355 N.W. 36th. St., Ste. 305, VIRGINIA GARDENS, FLORIDA 33166
Phone : (305)871-1530 , Fax : (305)871-1531
e-mail: tilteco@aol.com
CA-0006719
WALTER A. TILLIT Jr., P.E.
FLORIDA Lic. # 44167

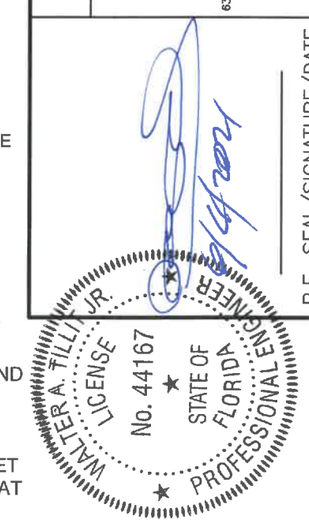


P.E. SEAL/SIGNATURE/DATE

# MAXIMUM A.S.D. DESIGN PRESSURE RATING FOR JAMBS AT SINGLE SPAN CURTAIN WALL FASTENED TO EXISTING STRUCTURE W/ 3/8"Ø FASTENERS (SEE ALSO SHEETS 15, 16 & 17 )

## OPTION #1 : 2 FASTENERS CONNECTION

| MAXIMUM MULLION SPAN | EFFECTIVE SPACING b = $S_5$/2 | MAXIMUM A.S.D. DESIGN PRESSURE RATING (psf) | | | | | |
|---|---|---|---|---|---|---|---|
| | | POURED CONCRETE (Min. f'c = 3ksi) SUBSTRATE | | | GROUT FILLED CONCRETE BLOCK SUBSTRATE | | 1/4" Min. THK ASTM A-36 STEEL SUBSTRATE |
| | | FASTENER TYPES | | | FASTENER TYPES | | FASTENER |
| "L" (ft-in) | "b" ft-in) | E | F | G | H | I | J |
| 8'-5" | 1'-9" | 70.0 | 70.0 | 70.0 | 70.0 | 70.0 | 70.0 |
| | 2'-0" | 70.0 | 70.0 | 70.0 | 70.0 | 70.0 | 70.0 |
| | 2'-3" | 70.0 | 70.0 | 70.0 | 70.0 | 70.0 | 70.0 |
| | 2'-6" | 70.0 | 70.0 | 70.0 | 70.0 | 70.0 | 70.0 |
| | 2'-9" | 70.0 | 70.0 | 67.8 | 70.0 | 67.8 | 70.0 |
| | 3'-3" | 70.0 | 70.0 | 57.4 | 70.0 | 57.4 | 70.0 |
| 8'-6" | 1'-9" | 70.0 | 70.0 | 70.0 | 70.0 | 70.0 | 70.0 |
| | 2'-0" | 70.0 | 70.0 | 70.0 | 70.0 | 70.0 | 70.0 |
| | 2'-3" | 70.0 | 70.0 | 70.0 | 70.0 | 70.0 | 70.0 |
| | 2'-6" | 70.0 | 70.0 | 70.0 | 70.0 | 70.0 | 70.0 |
| | 2'-9" | 70.0 | 70.0 | 67.2 | 70.0 | 67.2 | 70.0 |
| | 3'-3" | 69.7 | 69.7 | 56.8 | 69.7 | 56.8 | 70.0 |
| 9'-0" | 1'-9" | 70.0 | 70.0 | 70.0 | 70.0 | 70.0 | 70.0 |
| | 2'-0" | 70.0 | 70.0 | 70.0 | 70.0 | 70.0 | 70.0 |
| | 2'-3" | 70.0 | 70.0 | 70.0 | 70.0 | 70.0 | 70.0 |
| | 2'-6" | 70.0 | 70.0 | 70.0 | 70.0 | 69.8 | 70.0 |
| | 2'-9" | 70.0 | 70.0 | 70.0 | 70.0 | 63.4 | 70.0 |
| | 3'-3" | 65.8 | 65.8 | 53.7 | 65.8 | 53.7 | 70.0 |
| 9'-6" | 1'-9" | 70.0 | 70.0 | 70.0 | 70.0 | 70.0 | 70.0 |
| | 2'-0" | 70.0 | 70.0 | 70.0 | 70.0 | 70.0 | 70.0 |
| | 2'-3" | 70.0 | 70.0 | 70.0 | 70.0 | 70.0 | 70.0 |
| | 2'-6" | 70.0 | 70.0 | 66.1 | 70.0 | 66.1 | 70.0 |
| | 2'-9" | 70.0 | 70.0 | 60.1 | 70.0 | 60.1 | 70.0 |
| | 3'-3" | 62.3 | 62.3 | 50.9 | 62.3 | 50.9 | 70.0 |
| 10'-0" | 1'-9" | 70.0 | 70.0 | 70.0 | 70.0 | 70.0 | 70.0 |
| | 2'-0" | 70.0 | 70.0 | 70.0 | 70.0 | 70.0 | 70.0 |
| | 2'-3" | 70.0 | 70.0 | 70.0 | 70.0 | 69.8 | 70.0 |
| | 2'-6" | 70.0 | 70.0 | 62.8 | 70.0 | 62.8 | 70.0 |
| | 2'-9" | 70.0 | 70.0 | 57.1 | 70.0 | 57.1 | 70.0 |
| | 3'-3" | 59.2 | 59.2 | 48.3 | 59.2 | 48.3 | 67.0 |
| 10'-6" | 1'-9" | 70.0 | 70.0 | 70.0 | 70.0 | 70.0 | 70.0 |
| | 2'-0" | 70.0 | 70.0 | 70.0 | 70.0 | 70.0 | 70.0 |
| | 2'-3" | 70.0 | 70.0 | 66.5 | 70.0 | 66.5 | 70.0 |
| | 2'-6" | 70.0 | 70.0 | 59.8 | 70.0 | 59.8 | 70.0 |
| | 2'-9" | 66.7 | 66.7 | 54.4 | 66.7 | 54.4 | 70.0 |
| | 3'-3" | 56.4 | 56.4 | 46.0 | 56.4 | 46.0 | 63.9 |
| 11'-0" | 1'-9" | 70.0 | 70.0 | 70.0 | 70.0 | 70.0 | 70.0 |
| | 2'-0" | 70.0 | 70.0 | 70.0 | 70.0 | 70.0 | 70.0 |
| | 2'-3" | 70.0 | 70.0 | 63.4 | 70.0 | 63.4 | 70.0 |
| | 2'-6" | 70.0 | 70.0 | 57.1 | 70.0 | 57.1 | 70.0 |
| | 2'-9" | 63.6 | 63.6 | 51.9 | 63.6 | 51.9 | 70.0 |
| | 3'-3" | 53.8 | 53.8 | 43.9 | 53.8 | 43.9 | 60.9 |
| 11'-6" | 1'-9" | 70.0 | 70.0 | 78.0 | 70.0 | 70.0 | 70.0 |
| | 2'-0" | 70.0 | 70.0 | 70.0 | 70.0 | 68.3 | 70.0 |
| | 2'-3" | 70.0 | 70.0 | 70.0 | 70.0 | 60.7 | 70.0 |
| | 2'-6" | 66.9 | 66.9 | 54.6 | 66.9 | 54.6 | 70.0 |
| | 2'-9" | 60.9 | 60.9 | 49.7 | 60.9 | 49.7 | 68.9 |
| | 3'-3" | 51.5 | 51.5 | 42.0 | 51.5 | 42.0 | 58.3 |
| 12'-0" | 1'-9" | 70.0 | 70.0 | 70.0 | 70.0 | 70.0 | 70.0 |
| | 2'-0" | 70.0 | 70.0 | 65.4 | 70.0 | 65.4 | 70.0 |
| | 2'-3" | 70.0 | 70.0 | 58.2 | 70.0 | 58.2 | 70.0 |
| | 2'-6" | 64.2 | 64.2 | 52.3 | 64.2 | 52.3 | 70.0 |
| | 2'-9" | 58.3 | 58.3 | 47.6 | 58.3 | 47.6 | 66.0 |
| | 3'-3" | 49.4 | 49.4 | 40.3 | 49.4 | 40.3 | 55.9 |
| 12'-6" | 1'-9" | 70.0 | 70.0 | 70.0 | 70.0 | 70.0 | 70.0 |
| | 2'-0" | 70.0 | 70.0 | 62.8 | 70.0 | 62.8 | 70.0 |
| | 2'-3" | 68.4 | 68.4 | 55.8 | 68.4 | 55.8 | 70.0 |
| | 2'-6" | 61.6 | 61.6 | 50.2 | 61.6 | 50.2 | 69.7 |
| | 2'-9" | 56.0 | 56.0 | 45.7 | 56.0 | 45.7 | 63.4 |
| | 3'-3" | 47.4 | 47.4 | 38.7 | 47.4 | 38.7 | 53.6 |

## OPTION #2 : 3 FASTENERS CONNECTION

| MAXIMUM MULLION SPAN | EFFECTIVE SPACING b = $S_5$/2 | MAXIMUM A.S.D. DESIGN PRESSURE RATING (psf) | | | | | |
|---|---|---|---|---|---|---|---|
| | | POURED CONCRETE (Min. f'c = 3ksi) SUBSTRATE | | | GROUT FILLED CONCRETE BLOCK SUBSTRATE | | 1/4" Min. THK ASTM A-36 STEEL SUBSTRATE |
| | | FASTENER TYPES | | | FASTENER TYPES | | FASTENER |
| "L" (ft-in) | "b" ft-in) | E | F | G | H | I | J |
| 8'-5" | 1'-9" | 70.0 | 70.0 | 70.0 | 70.0 | 70.0 | 70.0 |
| | 2'-0" | 70.0 | 70.0 | 70.0 | 70.0 | 70.0 | 70.0 |
| | 2'-3" | 70.0 | 70.0 | 70.0 | 70.0 | 70.0 | 70.0 |
| | 2'-6" | 70.0 | 70.0 | 70.0 | 70.0 | 70.0 | 70.0 |
| | 2'-9" | 70.0 | 70.0 | 70.0 | 70.0 | 70.0 | 70.0 |
| | 3'-3" | 70.0 | 70.0 | 70.0 | 70.0 | 70.0 | 70.0 |
| 8'-6" | 1'-9" | 70.0 | 70.0 | 70.0 | 70.0 | 70.0 | 70.0 |
| | 2'-0" | 70.0 | 70.0 | 70.0 | 70.0 | 70.0 | 70.0 |
| | 2'-3" | 70.0 | 70.0 | 70.0 | 70.0 | 70.0 | 70.0 |
| | 2'-6" | 70.0 | 70.0 | 70.0 | 70.0 | 70.0 | 70.0 |
| | 2'-9" | 70.0 | 70.0 | 70.0 | 70.0 | 70.0 | 70.0 |
| | 3'-3" | 70.0 | 70.0 | 70.0 | 70.0 | 70.0 | 70.0 |
| 9'-0" | 1'-9" | 70.0 | 70.0 | 70.0 | 70.0 | 70.0 | 70.0 |
| | 2'-0" | 70.0 | 70.0 | 70.0 | 70.0 | 70.0 | 70.0 |
| | 2'-3" | 70.0 | 70.0 | 70.0 | 70.0 | 70.0 | 70.0 |
| | 2'-6" | 70.0 | 70.0 | 70.0 | 70.0 | 70.0 | 70.0 |
| | 2'-9" | 70.0 | 70.0 | 70.0 | 70.0 | 70.0 | 70.0 |
| | 3'-3" | 70.0 | 70.0 | 70.0 | 70.0 | 70.0 | 70.0 |
| 9'-6" | 1'-9" | 70.0 | 70.0 | 70.0 | 70.0 | 70.0 | 70.0 |
| | 2'-0" | 70.0 | 70.0 | 70.0 | 70.0 | 70.0 | 70.0 |
| | 2'-3" | 70.0 | 70.0 | 70.0 | 70.0 | 70.0 | 70.0 |
| | 2'-6" | 70.0 | 70.0 | 70.0 | 70.0 | 70.0 | 70.0 |
| | 2'-9" | 70.0 | 70.0 | 70.0 | 70.0 | 70.0 | 70.0 |
| | 3'-3" | 70.0 | 70.0 | 70.0 | 70.0 | 70.0 | 70.0 |
| 10'-0" | 1'-9" | 70.0 | 70.0 | 70.0 | 70.0 | 70.0 | 70.0 |
| | 2'-0" | 70.0 | 70.0 | 70.0 | 70.0 | 70.0 | 70.0 |
| | 2'-3" | 70.0 | 70.0 | 70.0 | 70.0 | 70.0 | 70.0 |
| | 2'-6" | 70.0 | 70.0 | 70.0 | 70.0 | 70.0 | 70.0 |
| | 2'-9" | 70.0 | 70.0 | 70.0 | 70.0 | 70.0 | 70.0 |
| | 3'-3" | 70.0 | 70.0 | 70.0 | 70.0 | 70.0 | 70.0 |
| 10'-6" | 1'-9" | 70.0 | 70.0 | 70.0 | 70.0 | 70.0 | 70.0 |
| | 2'-0" | 70.0 | 70.0 | 70.0 | 70.0 | 70.0 | 70.0 |
| | 2'-3" | 70.0 | 70.0 | 70.0 | 70.0 | 70.0 | 70.0 |
| | 2'-6" | 70.0 | 70.0 | 70.0 | 70.0 | 70.0 | 70.0 |
| | 2'-9" | 70.0 | 70.0 | 70.0 | 70.0 | 70.0 | 70.0 |
| | 3'-3" | 70.0 | 70.0 | 70.0 | 70.0 | 69.0 | 70.0 |
| 11'-0" | 1'-9" | 70.0 | 70.0 | 70.0 | 70.0 | 70.0 | 70.0 |
| | 2'-0" | 70.0 | 70.0 | 70.0 | 70.0 | 70.0 | 70.0 |
| | 2'-3" | 70.0 | 70.0 | 70.0 | 70.0 | 70.0 | 70.0 |
| | 2'-6" | 70.0 | 70.0 | 70.0 | 70.0 | 70.0 | 70.0 |
| | 2'-9" | 70.0 | 70.0 | 70.0 | 70.0 | 70.0 | 70.0 |
| | 3'-3" | 70.0 | 70.0 | 65.9 | 70.0 | 65.9 | 70.0 |
| 11'-6" | 1'-9" | 100.0 | 100.0 | 100.0 | 100.0 | 70.0 | 100.0 |
| | 2'-0" | 70.0 | 70.0 | 70.0 | 70.0 | 70.0 | 70.0 |
| | 2'-3" | 70.0 | 70.0 | 70.0 | 70.0 | 70.0 | 70.0 |
| | 2'-6" | 70.0 | 70.0 | 70.0 | 70.0 | 70.0 | 70.0 |
| | 2'-9" | 70.0 | 70.0 | 70.0 | 70.0 | 70.0 | 70.0 |
| | 3'-3" | 70.0 | 70.0 | 63.0 | 70.0 | 63.0 | 70.0 |
| 12'-0" | 1'-9" | 100.0 | 100.0 | 100.0 | 100.0 | 70.0 | 100.0 |
| | 2'-0" | 70.0 | 70.0 | 70.0 | 70.0 | 70.0 | 70.0 |
| | 2'-3" | 70.0 | 70.0 | 70.0 | 70.0 | 70.0 | 70.0 |
| | 2'-6" | 70.0 | 70.0 | 70.0 | 70.0 | 70.0 | 70.0 |
| | 2'-9" | 70.0 | 70.0 | 70.0 | 70.0 | 70.0 | 70.0 |
| | 3'-3" | 70.0 | 70.0 | 60.4 | 70.0 | 60.4 | 70.0 |
| 12'-6" | 1'-9" | 70.0 | 70.0 | 70.0 | 70.0 | 70.0 | 70.0 |
| | 2'-0" | 70.0 | 70.0 | 70.0 | 70.0 | 70.0 | 70.0 |
| | 2'-3" | 70.0 | 70.0 | 70.0 | 70.0 | 70.0 | 70.0 |
| | 2'-6" | 70.0 | 70.0 | 70.0 | 70.0 | 70.0 | 70.0 |
| | 2'-9" | 70.0 | 70.0 | 68.5 | 70.0 | 68.5 | 70.0 |
| | 3'-3" | 70.0 | 70.0 | 58.0 | 70.0 | 58.0 | 70.0 |

## OPTION #3 : 4 FASTENERS CONNECTION

| MAXIMUM MULLION SPAN | EFFECTIVE SPACING b = $S_5$/2 | MAXIMUM A.S.D. DESIGN PRESSURE RATING (psf) | | | | | |
|---|---|---|---|---|---|---|---|
| | | POURED CONCRETE (Min. f'c = 3ksi) SUBSTRATE | | | GROUT FILLED CONCRETE BLOCK SUBSTRATE | | 1/4" Min. THK ASTM A-36 STEEL SUBSTRATE |
| | | FASTENER TYPES | | | FASTENER TYPES | | FASTENER |
| "L" (ft-in) | "b" ft-in) | E | F | G | H | I | J |
| 8'-5" MAX. 12'-6" | 1'-9" | 70.0 | 70.0 | 70.0 | 70.0 | 70.0 | 70.0 |
| | 2'-0" | 70.0 | 70.0 | 70.0 | 70.0 | 70.0 | 70.0 |
| | 2'-3" | 70.0 | 70.0 | 70.0 | 70.0 | 70.0 | 70.0 |
| | 2'-6" | 70.0 | 70.0 | 70.0 | 70.0 | 70.0 | 70.0 |
| | 2'-9" | 70.0 | 70.0 | 70.0 | 70.0 | 70.0 | 70.0 |
| | 3'-3" | 70.0 | 70.0 | 70.0 | 70.0 | 70.0 | 70.0 |

OPTION # 1 (ELEVATION)
(2) FASTENERS CONNECTION

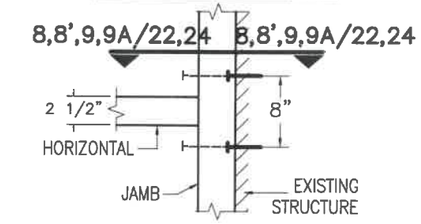


OPTION # 2 (ELEVATION)
(3) FASTENERS CONNECTION

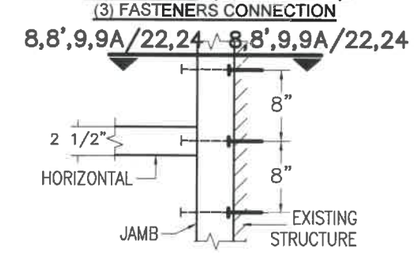


OPTION # 3 (ELEVATION)
(4) FASTENERS CONNECTION

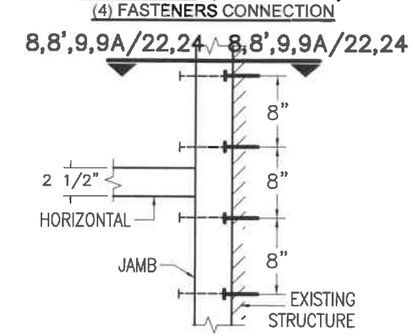


### (B) FASTENER TYPES REQUIREMENTS:

E - 3/8"Ø HILTI KWIK BOLT TZ ANCHOR W/ 2" Min. EMBEDMENT INTO POURED CONCRETE (Min. f'c = 3 ksi) BEYOND ANY FINISH MATERIAL, W/ 4" MIN. EDGE DISTANCE.

F - 3/8"Ø HILTI KWIK BOLT 3 ANCHOR W/ 2 1/2" Min. EMBEDMENT INTO POURED CONCRETE (Min. f'c = 3 ksi) BEYOND ANY FINISH MATERIAL, W/ 4" MIN. EDGE DISTANCE.

G - 3/8"Ø HILTI HUS-H SCREW ANCHOR W/ 2 3/4" Min. EMBEDMENT INTO POURED CONCRETE (Min. f'c = 3 ksi) BEYOND ANY FINISH MATERIAL, W/ 3 3/4" MIN. EDGE DISTANCE.

H - 3/8"Ø HILTI KWIK BOLT 3 ANCHOR W/ 2 1/2" Min. EMBEDMENT INTO GROUT FILLED CONCRETE BLOCK BEYOND ANY FINISH MATERIAL, W/ 4" MIN. EDGE DISTANCE.

I - 3/8"Ø HILTI HUS-H SCREW ANCHOR W/ 3 1/4" Min. EMBEDMENT INTO GROUT FILLED CONCRETE BLOCK BEYOND ANY FINISH MATERIAL, W/ 4" MIN. EDGE DISTANCE.

J - 3/8"Ø-13 TYPE "F" GRADE 5 BOLT TO 1/4" MIN. THK. ASTM A-36 STEEL W/ 1" MIN. EDGE DISTANCE OR 3/8"Ø-13 SAE GRADE 5, GALVANIZED STEEL BOLT W/ LOCK WASHER & NUT TO 1/4" Min. THK. ASTM A-36 STEEL & MIN. E.D. = 3/4".

* SEE SHEET 9 FOR EFFECTIVE SPACING DEFINITION AT ISOMETRIC.

FLORIDA BUILDING CODE (High & Non High Velocity Hurricane Zone)

HR-251DG CAPTURED DRY GLAZED CURTAIN WALL SYSTEM LARGE MISSILE IMPACT INSULATED GLASS

F.R.L DRAWN BY | 04/15/2021 DATE | 21-069 DRAWING No | SHEET 14 OF 36

©2021 TILTECO, INC

TILTECO INC.
TILLIT TESTING & ENGINEERING COMPANY
6355 N.W. 36th. St., Ste. 305, VIRGINIA GARDENS, FLORIDA 33166
Phone : (305)871-1530 . Fax : (305)871-1531
e-mail: tilteco@aol.com
CA-0006719
WALTER A. TILLIT JR., P.E.
FLORIDA Lic. # 44167

Oldcastle BuildingEnvelope™
803 Airport Rd - Terrell, TX 75160
www.OldcastleBE.com - Phone 800-869-4567

| REV. No | DESCRIPTION | DATE | REV. No | DESCRIPTION | DATE |
|---|---|---|---|---|---|
| 1 | - | - | 3 | - | - |
| 2 | - | - | 4 | - | - |

WALTER A. TILLIT JR. LICENSE No. 44167 STATE OF FLORIDA PROFESSIONAL ENGINEER

4/15/2021

P.E. SEAL/SIGNATURE/DATE

# MAXIMUM A.S.D. DESIGN PRESSURE RATING FOR JAMBS AT TWIN SPAN CURTAIN WALL FASTENED TO EXISTING STRUCTURE W/ 3/8"Ø FASTENERS (CONTINUED)

## OPTION #1 : 2 FASTENERS CONNECTION

| MAXIMUM MULLION SPAN "L" (ft-in) | EFFECTIVE SPACING b = $S_5$/2 * "b" (ft-in) | MAXIMUM A.S.D. DESIGN PRESSURE RATING (psf) POURED CONCRETE (Min. fc = 3ksi) SUBSTRATE FASTENER TYPES E | F | G | GROUT FILLED CONCRETE BLOCK SUBSTRATE FASTENER TYPES H | I | 1/4" Min. THK ASTM A-36 STEEL SUBSTRATE FASTENER J |
|---|---|---|---|---|---|---|---|
| 8 '- 5 " | 1 '- 9 " | 70.0 | 70.0 | 64.1 | 70.0 | 64.1 | 70.0 |
| | 2 '- 0 " | 68.7 | 68.7 | 56.1 | 68.7 | 56.1 | 70.0 |
| | 2 '- 3 " | 61.1 | 61.1 | 49.8 | 61.1 | 49.8 | 69.2 |
| | 2 '- 6 " | 55.0 | 55.0 | 44.9 | 55.0 | 44.9 | 62.3 |
| | 2 '- 9 " | 50.0 | 50.0 | 40.8 | 50.0 | 40.8 | 56.6 |
| 8 '- 6 " | 1 '- 9 " | 70.0 | 70.0 | 64.1 | 70.0 | 64.1 | 70.0 |
| | 2 '- 0 " | 68.7 | 68.7 | 56.1 | 68.7 | 56.1 | 70.0 |
| | 2 '- 3 " | 61.1 | 61.1 | 49.8 | 61.1 | 49.8 | 69.2 |
| | 2 '- 6 " | 55.0 | 55.0 | 44.9 | 55.0 | 44.9 | 62.3 |
| | 2 '- 9 " | 50.0 | 50.0 | 40.8 | 50.0 | 40.8 | 56.6 |
| 9 '- 0 " | 1 '- 9 " | 70.0 | 70.0 | 64.1 | 70.0 | 64.1 | 70.0 |
| | 2 '- 0 " | 68.7 | 68.7 | 56.1 | 68.7 | 56.1 | 70.0 |
| | 2 '- 3 " | 61.1 | 61.1 | 49.8 | 61.1 | 49.8 | 69.2 |
| | 2 '- 6 " | 55.0 | 55.0 | 44.9 | 55.0 | 44.9 | 62.3 |
| | 2 '- 9 " | 50.0 | 50.0 | 40.8 | 50.0 | 40.8 | 56.6 |
| 9 '- 6 " | 1 '- 9 " | 70.0 | 70.0 | 64.1 | 70.0 | 64.1 | 70.0 |
| | 2 '- 0 " | 68.7 | 68.7 | 56.1 | 68.7 | 56.1 | 70.0 |
| | 2 '- 3 " | 61.1 | 61.1 | 49.8 | 61.1 | 49.8 | 69.2 |
| | 2 '- 6 " | 55.0 | 55.0 | 44.9 | 55.0 | 44.9 | 62.3 |
| | 2 '- 9 " | 50.0 | 50.0 | 40.8 | 50.0 | 40.8 | 56.6 |
| 10 '- 0 " | 1 '- 9 " | 70.0 | 70.0 | 64.1 | 70.0 | 64.1 | 70.0 |
| | 2 '- 0 " | 68.7 | 68.7 | 56.1 | 68.7 | 56.1 | 70.0 |
| | 2 '- 3 " | 61.1 | 61.1 | 49.8 | 61.1 | 49.8 | 69.2 |
| | 2 '- 6 " | 55.0 | 55.0 | 44.9 | 55.0 | 44.9 | 62.3 |
| | 2 '- 9 " | 50.0 | 50.0 | 40.8 | 50.0 | 40.8 | 56.6 |
| 10 '- 6 " | 1 '- 9 " | 70.0 | 70.0 | 64.1 | 70.0 | 64.1 | 70.0 |
| | 2 '- 0 " | 68.7 | 68.7 | 56.1 | 68.7 | 56.1 | 70.0 |
| | 2 '- 3 " | 61.1 | 61.1 | 49.8 | 61.1 | 49.8 | 69.2 |
| | 2 '- 6 " | 55.0 | 55.0 | 44.9 | 55.0 | 44.9 | 62.3 |
| | 2 '- 9 " | 50.0 | 50.0 | 40.8 | 50.0 | 40.8 | 56.6 |
| 11 '- 0 " | 1 '- 9 " | 70.0 | 70.0 | 64.1 | 70.0 | 64.1 | 70.0 |
| | 2 '- 0 " | 68.7 | 68.7 | 56.1 | 68.7 | 56.1 | 70.0 |
| | 2 '- 3 " | 61.1 | 61.1 | 49.8 | 61.1 | 49.8 | 69.2 |
| | 2 '- 6 " | 55.0 | 55.0 | 44.9 | 55.0 | 44.9 | 62.3 |
| | 2 '- 9 " | 50.0 | 50.0 | 40.8 | 50.0 | 40.8 | 56.6 |
| 11 '- 6 " | 1 '- 9 " | 70.0 | 70.0 | 64.1 | 70.0 | 64.1 | 70.0 |
| | 2 '- 0 " | 68.7 | 68.7 | 56.1 | 68.7 | 56.1 | 70.0 |
| | 2 '- 3 " | 61.1 | 61.1 | 49.8 | 61.1 | 49.8 | 69.2 |
| | 2 '- 6 " | 55.0 | 55.0 | 44.9 | 55.0 | 44.9 | 62.3 |
| | 2 '- 9 " | 50.0 | 50.0 | 40.8 | 50.0 | 40.8 | 56.6 |
| 12 '- 0 " | 1 '- 9 " | 70.0 | 70.0 | 64.1 | 70.0 | 64.1 | 70.0 |
| | 2 '- 0 " | 68.7 | 68.7 | 56.1 | 68.7 | 56.1 | 70.0 |
| | 2 '- 3 " | 61.1 | 61.1 | 49.8 | 61.1 | 49.8 | 69.2 |
| | 2 '- 6 " | 55.0 | 55.0 | 44.9 | 55.0 | 44.9 | 62.3 |
| | 2 '- 9 " | 50.0 | 50.0 | 40.8 | 50.0 | 40.8 | 56.6 |
| 12 '- 6 " | 1 '- 9 " | 70.0 | 70.0 | 64.1 | 70.0 | 64.1 | 70.0 |
| | 2 '- 0 " | 68.7 | 68.7 | 56.1 | 68.7 | 56.1 | 70.0 |
| | 2 '- 3 " | 61.1 | 61.1 | 49.8 | 61.1 | 49.8 | 69.2 |
| | 2 '- 6 " | 55.0 | 55.0 | 44.9 | 55.0 | 44.9 | 62.3 |
| | 2 '- 9 " | 50.0 | 50.0 | 40.8 | 50.0 | 40.8 | 56.6 |

## OPTION #2 : 3 FASTENERS CONNECTION

| MAXIMUM MULLION SPAN "L" (ft-in) | EFFECTIVE SPACING b = $S_5$/2 * "b" (ft-in) | MAXIMUM A.S.D. DESIGN PRESSURE RATING (psf) POURED CONCRETE (Min. fc = 3ksi) SUBSTRATE FASTENER TYPES E | F | G | GROUT FILLED CONCRETE BLOCK SUBSTRATE FASTENER TYPES H | I | 1/4" Min. THK ASTM A-36 STEEL SUBSTRATE FASTENER J |
|---|---|---|---|---|---|---|---|
| 8 '- 5 " | 1 '- 9 " | 70.0 | 70.0 | 70.0 | 70.0 | 70.0 | 70.0 |
| | 2 '- 0 " | 70.0 | 70.0 | 70.0 | 70.0 | 70.0 | 70.0 |
| | 2 '- 3 " | 70.0 | 70.0 | 70.0 | 70.0 | 70.0 | 70.0 |
| | 2 '- 6 " | 70.0 | 70.0 | 67.3 | 70.0 | 67.3 | 70.0 |
| | 2 '- 9 " | 70.0 | 70.0 | 61.2 | 70.0 | 61.2 | 70.0 |
| 8 '- 6 " | 1 '- 9 " | 70.0 | 70.0 | 70.0 | 70.0 | 70.0 | 70.0 |
| | 2 '- 0 " | 70.0 | 70.0 | 70.0 | 70.0 | 70.0 | 70.0 |
| | 2 '- 3 " | 70.0 | 70.0 | 70.0 | 70.0 | 70.0 | 70.0 |
| | 2 '- 6 " | 70.0 | 70.0 | 67.3 | 70.0 | 67.3 | 70.0 |
| | 2 '- 9 " | 70.0 | 70.0 | 61.2 | 70.0 | 61.2 | 70.0 |
| 9 '- 0 " | 1 '- 9 " | 70.0 | 70.0 | 70.0 | 70.0 | 70.0 | 70.0 |
| | 2 '- 0 " | 70.0 | 70.0 | 70.0 | 70.0 | 70.0 | 70.0 |
| | 2 '- 3 " | 70.0 | 70.0 | 70.0 | 70.0 | 70.0 | 70.0 |
| | 2 '- 6 " | 70.0 | 70.0 | 67.3 | 70.0 | 67.3 | 70.0 |
| | 2 '- 9 " | 70.0 | 70.0 | 61.2 | 70.0 | 61.2 | 70.0 |
| 9 '- 6 " | 1 '- 9 " | 70.0 | 70.0 | 70.0 | 70.0 | 70.0 | 70.0 |
| | 2 '- 0 " | 70.0 | 70.0 | 70.0 | 70.0 | 70.0 | 70.0 |
| | 2 '- 3 " | 70.0 | 70.0 | 70.0 | 70.0 | 70.0 | 70.0 |
| | 2 '- 6 " | 70.0 | 70.0 | 67.3 | 70.0 | 67.3 | 70.0 |
| | 2 '- 9 " | 70.0 | 70.0 | 61.2 | 70.0 | 61.2 | 70.0 |
| 10 '- 0 " | 1 '- 9 " | 70.0 | 70.0 | 70.0 | 70.0 | 70.0 | 70.0 |
| | 2 '- 0 " | 70.0 | 70.0 | 70.0 | 70.0 | 70.0 | 70.0 |
| | 2 '- 3 " | 70.0 | 70.0 | 70.0 | 70.0 | 70.0 | 70.0 |
| | 2 '- 6 " | 70.0 | 70.0 | 67.3 | 70.0 | 67.3 | 70.0 |
| | 2 '- 9 " | 70.0 | 70.0 | 61.2 | 70.0 | 61.2 | 70.0 |
| 10 '- 6 " | 1 '- 9 " | 70.0 | 70.0 | 70.0 | 70.0 | 70.0 | 70.0 |
| | 2 '- 0 " | 70.0 | 70.0 | 70.0 | 70.0 | 70.0 | 70.0 |
| | 2 '- 3 " | 70.0 | 70.0 | 70.0 | 70.0 | 70.0 | 70.0 |
| | 2 '- 6 " | 70.0 | 70.0 | 67.3 | 70.0 | 67.3 | 70.0 |
| | 2 '- 9 " | 70.0 | 70.0 | 61.2 | 70.0 | 61.2 | 70.0 |
| 11 '- 0 " | 1 '- 9 " | 70.0 | 70.0 | 70.0 | 70.0 | 70.0 | 70.0 |
| | 2 '- 0 " | 70.0 | 70.0 | 70.0 | 70.0 | 70.0 | 70.0 |
| | 2 '- 3 " | 70.0 | 70.0 | 70.0 | 70.0 | 70.0 | 70.0 |
| | 2 '- 6 " | 70.0 | 70.0 | 67.3 | 70.0 | 67.3 | 70.0 |
| | 2 '- 9 " | 70.0 | 70.0 | 61.2 | 70.0 | 61.2 | 70.0 |
| 11 '- 6 " | 1 '- 9 " | 70.0 | 70.0 | 70.0 | 70.0 | 70.0 | 70.0 |
| | 2 '- 0 " | 70.0 | 70.0 | 70.0 | 70.0 | 70.0 | 70.0 |
| | 2 '- 3 " | 70.0 | 70.0 | 70.0 | 70.0 | 70.0 | 70.0 |
| | 2 '- 6 " | 70.0 | 70.0 | 67.3 | 70.0 | 67.3 | 70.0 |
| | 2 '- 9 " | 70.0 | 70.0 | 61.2 | 70.0 | 61.2 | 70.0 |
| 12 '- 0 " | 1 '- 9 " | 70.0 | 70.0 | 70.0 | 70.0 | 70.0 | 70.0 |
| | 2 '- 0 " | 70.0 | 70.0 | 70.0 | 70.0 | 70.0 | 70.0 |
| | 2 '- 3 " | 70.0 | 70.0 | 70.0 | 70.0 | 70.0 | 70.0 |
| | 2 '- 6 " | 70.0 | 70.0 | 67.3 | 70.0 | 67.3 | 70.0 |
| | 2 '- 9 " | 70.0 | 70.0 | 61.2 | 70.0 | 61.2 | 70.0 |
| 12 '- 6 " | 1 '- 9 " | 70.0 | 70.0 | 70.0 | 70.0 | 70.0 | 70.0 |
| | 2 '- 0 " | 70.0 | 70.0 | 70.0 | 70.0 | 70.0 | 70.0 |
| | 2 '- 3 " | 70.0 | 70.0 | 70.0 | 70.0 | 70.0 | 70.0 |
| | 2 '- 6 " | 70.0 | 70.0 | 67.3 | 70.0 | 67.3 | 70.0 |
| | 2 '- 9 " | 70.0 | 70.0 | 61.2 | 70.0 | 61.2 | 70.0 |

## OPTION #3: 4 FASTENERS CONNECTION

| MAXIMUM MULLION SPAN "L" (ft-in) | EFFECTIVE SPACING b = $S_5$/2 * "b" (ft-in) | MAXIMUM A.S.D. DESIGN PRESSURE RATING (psf) POURED CONCRETE (Min. fc = 3ksi) SUBSTRATE FASTENER TYPES E | F | G | GROUT FILLED CONCRETE BLOCK SUBSTRATE FASTENER TYPES H | I | 1/4" Min. THK ASTM A-36 STEEL SUBSTRATE FASTENER J |
|---|---|---|---|---|---|---|---|
| 8 '- 5 " MAX. 12'-6" | 1 '- 9 " | 70.0 | 70.0 | 70.0 | 70.0 | 70.0 | 70.0 |
| | 2 '- 0 " | 70.0 | 70.0 | 70.0 | 70.0 | 70.0 | 70.0 |
| | 2 '- 3 " | 70.0 | 70.0 | 70.0 | 70.0 | 70.0 | 70.0 |
| | 2 '- 6 " | 70.0 | 70.0 | 70.0 | 70.0 | 70.0 | 70.0 |
| | 2 '- 9 " | 70.0 | 70.0 | 70.0 | 70.0 | 70.0 | 70.0 |

* SEE SHEET 10 FOR EFFECTIVE SPACING DEFINITION AT ISOMETRIC.

OPTION # 1 (ELEVATION)
(2) FASTENERS CONNECTION

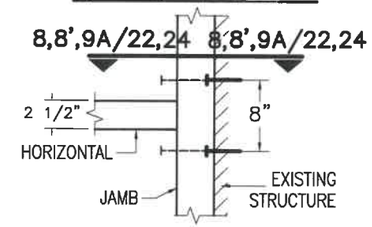


OPTION # 2 (ELEVATION)
(3) FASTENERS CONNECTION

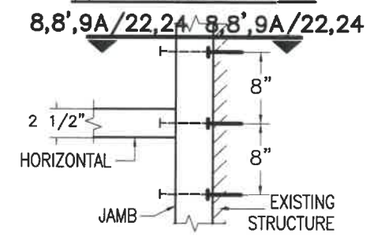


OPTION # 3 (ELEVATION)
(4) FASTENERS CONNECTION

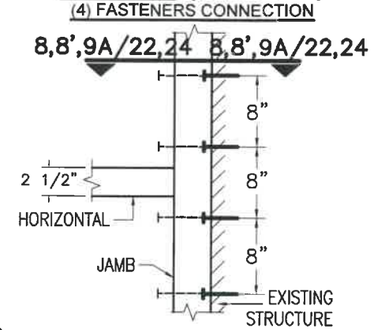


### B FASTENER TYPES REQUIREMENTS:

E - 3/8"Ø HILTI KWIK BOLT TZ ANCHOR W/ 2" Min. EMBEDMENT INTO POURED CONCRETE (Min. f'c = 3 ksi) BEYOND ANY FINISH MATERIAL, W/ 4" MIN. EDGE DISTANCE.

F - 3/8"Ø HILTI KWIK BOLT 3 ANCHOR W/ 2 1/2" Min. EMBEDMENT INTO POURED CONCRETE (Min. f'c = 3 ksi) BEYOND ANY FINISH MATERIAL, W/ 4" MIN. EDGE DISTANCE.

G - 3/8"Ø HILTI HUS-H SCREW ANCHOR W/ 2 3/4" Min. EMBEDMENT INTO POURED CONCRETE (Min. f'c = 3 ksi) BEYOND ANY FINISH MATERIAL, W/ 3 3/4" MIN. EDGE DISTANCE.

H - 3/8"Ø HILTI KWIK BOLT 3 ANCHOR W/ 2 1/2" Min. EMBEDMENT INTO GROUT FILLED CONCRETE BLOCK BEYOND ANY FINISH MATERIAL, W/ 4" MIN. EDGE DISTANCE.

I - 3/8"Ø HILTI HUS-H SCREW ANCHOR W/ 3 1/4" Min. EMBEDMENT INTO GROUT FILLED CONCRETE BLOCK BEYOND ANY FINISH MATERIAL, W/ 4" MIN. EDGE DISTANCE.

J - 3/8"Ø-13 TYPE "F" GRADE 5 BOLT TO 1/4" MIN. THK. ASTM A-36 STEEL W/ 1" MIN. EDGE DISTANCE OR 3/8"Ø-13 SAE GRADE 5, GALVANIZED STEEL BOLT W/ LOCK WASHER & NUT TO 1/4" Min. THK. ASTM A-36 STEEL & MIN. E.D. = 3/4".

FLORIDA BUILDING CODE (High & Non High Velocity Hurricane Zone)

HR-251DG CAPTURED DRY GLAZED CURTAIN WALL SYSTEM LARGE MISSILE IMPACT INSULATED GLASS

F.R.L DRAWN BY | 04/15/2021 DATE | 21-069 DRAWING No | SHEET 15 OF 36

Oldcastle BuildingEnvelope™
803 Airport Rd - Terrell, TX 75160
www.OldcastleBE.com - Phone 800-869-4567

| REV. No | DESCRIPTION | DATE | REV. No | DESCRIPTION | DATE |
|---|---|---|---|---|---|
| 1 | - | - | 3 | - | - |
| 2 | - | - | 4 | - | - |

©2021 TILTECO, INC

TILTECO INC.
TILLIT TESTING & ENGINEERING COMPANY
6355 N.W. 36th. St. Ste. 305, VIRGINIA GARDENS, FLORIDA 33166
Phone : (305)871-1530 . Fax : (305)871-1531
e-mail: tilteco@aol.com
CA-0006719
WALTER A. TILLIT Jr., P.E.
FLORIDA Lic. # 44167

WALTER A. TILLIT JR. LICENSE No. 44167 STATE OF FLORIDA PROFESSIONAL ENGINEER

P.E. SEAL/SIGNATURE/DATE

# MAXIMUM A.S.D. DESIGN PRESSURE RATING FOR JAMBS AT SINGLE SPAN CURTAIN WALL FASTENED TO EXISTING STRUCTURE W/ 1/2"Ø FASTENERS (CONTINUED )

## OPTION #1 : 2 FASTENER CONNECTION

| MAXIMUM MULLION SPAN "L" (ft-in) | EFFECTIVE SPACING b = $S_s$ /2 "b" ft-in | MAXIMUM A.S.D DESIGN PRESSURE RATING (psf) POURED CONCRETE (Min. fc = 3ksi) SUBSTRATE FASTENER TYPES K | L | M | GROUT FILLED CONCRETE BLOCK SUBSTRATE FASTENER TYPES N | O | 1/4" Min. THK ASTM A-36 STEEL SUBSTRATE FASTENER P |
|---|---|---|---|---|---|---|---|
| 8 ' - 5 " | 1 ' - 9 " | 70.0 | 70.0 | 70.0 | 70.0 | 70.0 | 70.0 |
| | 2 ' - 0 " | 70.0 | 70.0 | 70.0 | 70.0 | 70.0 | 70.0 |
| | 2 ' - 3 " | 70.0 | 70.0 | 70.0 | 70.0 | 70.0 | 70.0 |
| | 2 ' - 6 " | 70.0 | 70.0 | 70.0 | 70.0 | 70.0 | 70.0 |
| | 2 ' - 9 " | 70.0 | 70.0 | 70.0 | 70.0 | 70.0 | 70.0 |
| | 3 ' - 3 " | 70.0 | 70.0 | 70.0 | 70.0 | 69.5 | 70.0 |
| 8 ' - 6 " | 1 ' - 9 " | 70.0 | 70.0 | 70.0 | 70.0 | 70.0 | 70.0 |
| | 2 ' - 0 " | 70.0 | 70.0 | 70.0 | 70.0 | 70.0 | 70.0 |
| | 2 ' - 3 " | 70.0 | 70.0 | 70.0 | 70.0 | 70.0 | 70.0 |
| | 2 ' - 6 " | 70.0 | 70.0 | 70.0 | 70.0 | 70.0 | 70.0 |
| | 2 ' - 9 " | 70.0 | 70.0 | 70.0 | 70.0 | 70.0 | 70.0 |
| | 3 ' - 3 " | 70.0 | 70.0 | 70.0 | 70.0 | 68.8 | 70.0 |
| 9 ' - 0 " | 1 ' - 9 " | 70.0 | 70.0 | 70.0 | 70.0 | 70.0 | 70.0 |
| | 2 ' - 0 " | 70.0 | 70.0 | 70.0 | 70.0 | 70.0 | 70.0 |
| | 2 ' - 3 " | 70.0 | 70.0 | 70.0 | 70.0 | 70.0 | 70.0 |
| | 2 ' - 6 " | 70.0 | 70.0 | 70.0 | 70.0 | 70.0 | 70.0 |
| | 2 ' - 9 " | 70.0 | 70.0 | 70.0 | 70.0 | 70.0 | 70.0 |
| | 3 ' - 3 " | 70.0 | 70.0 | 70.0 | 70.0 | 65.0 | 70.0 |
| 9 ' - 6 " | 1 ' - 9 " | 70.0 | 70.0 | 70.0 | 70.0 | 70.0 | 70.0 |
| | 2 ' - 0 " | 70.0 | 70.0 | 70.0 | 70.0 | 70.0 | 70.0 |
| | 2 ' - 3 " | 70.0 | 70.0 | 70.0 | 70.0 | 70.0 | 70.0 |
| | 2 ' - 6 " | 70.0 | 70.0 | 70.0 | 70.0 | 70.0 | 70.0 |
| | 2 ' - 9 " | 70.0 | 70.0 | 70.0 | 70.0 | 70.0 | 70.0 |
| | 3 ' - 3 " | 70.0 | 70.0 | 70.0 | 70.0 | 61.5 | 70.0 |
| 10 ' - 0 " | 1 ' - 9 " | 70.0 | 70.0 | 70.0 | 70.0 | 70.0 | 70.0 |
| | 2 ' - 0 " | 70.0 | 70.0 | 70.0 | 70.0 | 70.0 | 70.0 |
| | 2 ' - 3 " | 70.0 | 70.0 | 70.0 | 70.0 | 70.0 | 70.0 |
| | 2 ' - 6 " | 70.0 | 70.0 | 70.0 | 70.0 | 70.0 | 70.0 |
| | 2 ' - 9 " | 70.0 | 70.0 | 70.0 | 70.0 | 69.1 | 70.0 |
| | 3 ' - 3 " | 70.0 | 70.0 | 70.0 | 70.0 | 58.5 | 70.0 |
| 10 ' - 6 " | 1 ' - 9 " | 70.0 | 70.0 | 70.0 | 70.0 | 70.0 | 70.0 |
| | 2 ' - 0 " | 70.0 | 70.0 | 70.0 | 70.0 | 70.0 | 70.0 |
| | 2 ' - 3 " | 70.0 | 70.0 | 70.0 | 70.0 | 70.0 | 70.0 |
| | 2 ' - 6 " | 70.0 | 70.0 | 70.0 | 70.0 | 70.0 | 70.0 |
| | 2 ' - 9 " | 70.0 | 70.0 | 70.0 | 70.0 | 65.8 | 70.0 |
| | 3 ' - 3 " | 70.0 | 70.0 | 70.0 | 70.0 | 55.7 | 70.0 |
| 11 ' - 0 " | 1 ' - 9 " | 70.0 | 70.0 | 70.0 | 70.0 | 70.0 | 70.0 |
| | 2 ' - 0 " | 70.0 | 70.0 | 70.0 | 70.0 | 70.0 | 70.0 |
| | 2 ' - 3 " | 70.0 | 70.0 | 70.0 | 70.0 | 70.0 | 70.0 |
| | 2 ' - 6 " | 70.0 | 70.0 | 70.0 | 70.0 | 69.1 | 70.0 |
| | 2 ' - 9 " | 70.0 | 70.0 | 70.0 | 70.0 | 62.8 | 70.0 |
| | 3 ' - 3 " | 70.0 | 70.0 | 70.0 | 70.0 | 53.1 | 70.0 |
| 11 ' - 6 " | 1 ' - 9 " | 70.0 | 70.0 | 70.0 | 70.0 | 70.0 | 70.0 |
| | 2 ' - 0 " | 70.0 | 70.0 | 70.0 | 70.0 | 70.0 | 70.0 |
| | 2 ' - 3 " | 70.0 | 70.0 | 70.0 | 70.0 | 70.0 | 70.0 |
| | 2 ' - 6 " | 70.0 | 70.0 | 70.0 | 70.0 | 66.1 | 70.0 |
| | 2 ' - 9 " | 70.0 | 70.0 | 70.0 | 70.0 | 60.1 | 70.0 |
| | 3 ' - 3 " | 70.0 | 70.0 | 70.0 | 70.0 | 50.8 | 70.0 |
| 12 ' - 0 " | 1 ' - 9 " | 70.0 | 70.0 | 70.0 | 70.0 | 70.0 | 70.0 |
| | 2 ' - 0 " | 70.0 | 70.0 | 70.0 | 70.0 | 70.0 | 70.0 |
| | 2 ' - 3 " | 70.0 | 70.0 | 70.0 | 70.0 | 70.0 | 70.0 |
| | 2 ' - 6 " | 70.0 | 70.0 | 70.0 | 70.0 | 63.3 | 70.0 |
| | 2 ' - 9 " | 70.0 | 70.0 | 70.0 | 70.0 | 57.6 | 70.0 |
| | 3 ' - 3 " | 70.0 | 70.0 | 70.0 | 70.0 | 48.7 | 70.0 |
| 12 ' - 6 " | 1 ' - 9 " | 70.0 | 70.0 | 70.0 | 70.0 | 70.0 | 70.0 |
| | 2 ' - 0 " | 70.0 | 70.0 | 70.0 | 70.0 | 70.0 | 70.0 |
| | 2 ' - 3 " | 70.0 | 70.0 | 70.0 | 70.0 | 67.6 | 70.0 |
| | 2 ' - 6 " | 70.0 | 70.0 | 70.0 | 70.0 | 60.8 | 70.0 |
| | 2 ' - 9 " | 70.0 | 70.0 | 70.0 | 70.0 | 55.3 | 70.0 |
| | 3 ' - 3 " | 70.0 | 70.0 | 70.0 | 70.0 | 46.8 | 70.0 |

## OPTION # 2 : 3 FASTENERS CONNECTION

| MAXIMUM MULLION SPAN "L" (ft-in) | EFFECTIVE SPACING b = $S_s$ /2 "b" ft-in | MAXIMUM A.S.D DESIGN PRESSURE RATING (psf) POURED CONCRETE (Min. fc = 3ksi) SUBSTRATE FASTENER TYPES K | L | M | GROUT FILLED CONCRETE BLOCK SUBSTRATE FASTENER TYPES N | O | 1/4" Min. THK ASTM A-36 STEEL SUBSTRATE FASTENER P |
|---|---|---|---|---|---|---|---|
| 8 ' - 5 " MAX. 12'-6" | 1 ' - 9 " | 70.0 | 70.0 | 70.0 | 70.0 | 70.0 | 70.0 |
| | 2 ' - 0 " | 70.0 | 70.0 | 70.0 | 70.0 | 70.0 | 70.0 |
| | 2 ' - 3 " | 70.0 | 70.0 | 70.0 | 70.0 | 70.0 | 70.0 |
| | 2 ' - 6 " | 70.0 | 70.0 | 70.0 | 70.0 | 70.0 | 70.0 |
| | 2 ' - 9 " | 70.0 | 70.0 | 70.0 | 70.0 | 70.0 | 70.0 |
| | 3 ' - 3 " | 70.0 | 70.0 | 70.0 | 70.0 | 70.0 | 70.0 |

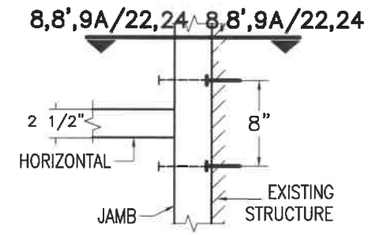


OPTION # 1 (ELEVATION)
(2) FASTENERS CONNECTION

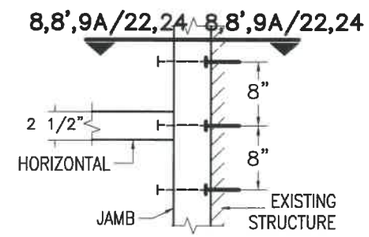


OPTION # 2 (ELEVATION)
(3) FASTENERS CONNECTION

B FASTENER TYPES REQUIREMENTS:

K - 1/2"Ø HILTI KWIK BOLT TZ ANCHOR W/ 2" Min. EMBEDMENT INTO POURED CONCRETE (Min. f'c = 3 ksi) BEYOND ANY FINISH MATERIAL, W/ 4" MIN. EDGE DISTANCE.

L - 1/2"Ø HILTI KWIK BOLT 3 ANCHOR W/ 3 1/2" Min. EMBEDMENT INTO POURED CONCRETE (Min. f'c = 3 ksi) BEYOND ANY FINISH MATERIAL, W/ 4" MIN. EDGE DISTANCE.

M - 1/2"Ø HILTI HUS-H SCREW ANCHOR W/ 3" Min. EMBEDMENT INTO POURED CONCRETE (Min. f'c = 3 ksi) BEYOND ANY FINISH MATERIAL, W/ 4" MIN. EDGE DISTANCE.

N - 1/2"Ø HILTI KWIK BOLT 3 ANCHOR W/ 3 1/2" Min. EMBEDMENT INTO GROUT FILLED CONCRETE BLOCK BEYOND ANY FINISH MATERIAL, W/ 4" MIN. EDGE DISTANCE.

O - 1/2"Ø HILTI HUS-H SCREW ANCHOR W/ 3" Min. EMBEDMENT INTO GROUT FILLED CONCRETE BLOCK BEYOND ANY FINISH MATERIAL, W/ 4" MIN. EDGE DISTANCE.

P - 1/2"Ø-13 TYPE "F" GRADE 5 BOLT TO 1/4" MIN. THK. ASTM A-36 STEEL W/ 1" MIN. EDGE DISTANCE OR 1/2"Ø-13 SAE GRADE 5, GALVANIZED STEEL BOLT W/ LOCK WASHER & NUT TO 1/4" MIN. THK. ASTM A-36 STEEL & MIN. E.D. = 1".

* SEE SHEET 9 FOR EFFECTIVE SPACING DEFINITION AT ISOMETRIC.

FLORIDA BUILDING CODE (High & Non High Velocity Hurricane Zone)

HR-251DG CAPTURED DRY GLAZED CURTAIN WALL SYSTEM LARGE MISSILE IMPACT INSULATED GLASS

F.R.L DRAWN BY

04/15/2021 DATE

21-069 DRAWING No

SHEET 16 OF 36

Oldcastle BuildingEnvelope™
803 Airport Rd - Terrell, TX 75160
www.OldcastleBE.com - Phone 800-869-4567

| REV. No | DESCRIPTION | DATE | REV. No | DESCRIPTION | DATE |
|---|---|---|---|---|---|
| 1 | - | - | 3 | - | - |
| 2 | - | - | 4 | - | - |

©2021 TILTECO, INC

TILTECO INC.
TILLIT TESTING & ENGINEERING COMPANY
6355 N.W. 36th. St., Ste. 305, VIRGINIA GARDENS, FLORIDA 33166
Phone : (305)871-1530 . Fax : (305)871-1531
e-mail: tilteco@aol.com
CA-0006719
WALTER A. TILLIT Jr., P.E.
FLORIDA Lic. # 44167

WALTER A. TILLIT JR. LICENSE No. 44167 STATE OF FLORIDA PROFESSIONAL ENGINEER

P.E. SEAL/SIGNATURE/DATE

# MAXIMUM A.S.D. DESIGN PRESSURE RATING FOR JAMBS AT TWIN SPAN CURTAIN WALL FASTENED TO EXISTING STRUCTURE W/ 1/2"Ø FASTENERS (CONTINUED)

**OPTION #1 : 2 FASTENERS CONNECTION**

| MAXIMUM MULLION SPAN | EFFECTIVE SPACING b = $S_5$/2 * | MAXIMUM A.S.D. DESIGN PRESSURE RATING (psf) | | | | | |
|---|---|---|---|---|---|---|---|
| | | POURED CONCRETE (Min. f'c = 3ksi) SUBSTRATE | | | GROUT FILLED CONCRETE BLOCK SUBSTRATE | | 1/4" Min. THK ASTM A-36 STEEL SUBSTRATE |
| | | FASTENER TYPES | | | FASTENER TYPES | | FASTENER |
| "L" (ft-in) | "b" (ft-in) | K | L | M | N | O | P |
| 8'-5" | 1'-9" | 70.0 | 70.0 | 70.0 | 70.0 | 70.0 | 70.0 |
| | 2'-0" | 70.0 | 70.0 | 70.0 | 70.0 | 67.9 | 70.0 |
| | 2'-3" | 70.0 | 70.0 | 70.0 | 70.0 | 60.3 | 70.0 |
| | 2'-6" | 70.0 | 70.0 | 70.0 | 70.0 | 54.3 | 70.0 |
| | 2'-9" | 70.0 | 70.0 | 70.0 | 70.0 | 49.4 | 70.0 |
| 8'-6" | 1'-9" | 70.0 | 70.0 | 70.0 | 70.0 | 70.0 | 70.0 |
| | 2'-0" | 70.0 | 70.0 | 70.0 | 70.0 | 67.9 | 70.0 |
| | 2'-3" | 70.0 | 70.0 | 70.0 | 70.0 | 60.3 | 70.0 |
| | 2'-6" | 70.0 | 70.0 | 70.0 | 70.0 | 54.3 | 70.0 |
| | 2'-9" | 70.0 | 70.0 | 70.0 | 70.0 | 49.4 | 70.0 |
| 9'-0" | 1'-9" | 70.0 | 70.0 | 70.0 | 70.0 | 70.0 | 70.0 |
| | 2'-0" | 70.0 | 70.0 | 70.0 | 70.0 | 67.9 | 70.0 |
| | 2'-3" | 70.0 | 70.0 | 70.0 | 70.0 | 60.3 | 70.0 |
| | 2'-6" | 70.0 | 70.0 | 70.0 | 70.0 | 54.3 | 70.0 |
| | 2'-9" | 70.0 | 70.0 | 70.0 | 70.0 | 49.4 | 70.0 |
| 9'-6" | 1'-9" | 70.0 | 70.0 | 70.0 | 70.0 | 70.0 | 70.0 |
| | 2'-0" | 70.0 | 70.0 | 70.0 | 70.0 | 67.9 | 70.0 |
| | 2'-3" | 70.0 | 70.0 | 70.0 | 70.0 | 60.3 | 70.0 |
| | 2'-6" | 70.0 | 70.0 | 70.0 | 70.0 | 54.3 | 70.0 |
| | 2'-9" | 70.0 | 70.0 | 70.0 | 70.0 | 49.4 | 70.0 |
| 10'-0" | 1'-9" | 70.0 | 70.0 | 70.0 | 70.0 | 70.0 | 70.0 |
| | 2'-0" | 70.0 | 70.0 | 70.0 | 70.0 | 67.9 | 70.0 |
| | 2'-3" | 70.0 | 70.0 | 70.0 | 70.0 | 60.3 | 70.0 |
| | 2'-6" | 70.0 | 70.0 | 70.0 | 70.0 | 54.3 | 70.0 |
| | 2'-9" | 70.0 | 70.0 | 70.0 | 70.0 | 49.4 | 70.0 |
| 10'-6" | 1'-9" | 70.0 | 70.0 | 70.0 | 70.0 | 70.0 | 70.0 |
| | 2'-0" | 70.0 | 70.0 | 70.0 | 70.0 | 67.9 | 70.0 |
| | 2'-3" | 70.0 | 70.0 | 70.0 | 70.0 | 60.3 | 70.0 |
| | 2'-6" | 70.0 | 70.0 | 70.0 | 70.0 | 54.3 | 70.0 |
| | 2'-9" | 70.0 | 70.0 | 70.0 | 70.0 | 49.4 | 70.0 |
| 11'-0" | 1'-9" | 70.0 | 70.0 | 70.0 | 70.0 | 70.0 | 70.0 |
| | 2'-0" | 70.0 | 70.0 | 70.0 | 70.0 | 67.9 | 70.0 |
| | 2'-3" | 70.0 | 70.0 | 70.0 | 70.0 | 60.3 | 70.0 |
| | 2'-6" | 70.0 | 70.0 | 70.0 | 70.0 | 54.3 | 70.0 |
| | 2'-9" | 70.0 | 70.0 | 70.0 | 70.0 | 49.4 | 70.0 |
| 11'-6" | 1'-9" | 70.0 | 70.0 | 70.0 | 70.0 | 70.0 | 70.0 |
| | 2'-0" | 70.0 | 70.0 | 70.0 | 70.0 | 67.9 | 70.0 |
| | 2'-3" | 70.0 | 70.0 | 70.0 | 70.0 | 60.3 | 70.0 |
| | 2'-6" | 70.0 | 70.0 | 70.0 | 70.0 | 54.3 | 70.0 |
| | 2'-9" | 70.0 | 70.0 | 70.0 | 70.0 | 49.4 | 70.0 |
| 12'-0" | 1'-9" | 70.0 | 70.0 | 70.0 | 70.0 | 70.0 | 70.0 |
| | 2'-0" | 70.0 | 70.0 | 70.0 | 70.0 | 67.9 | 70.0 |
| | 2'-3" | 70.0 | 70.0 | 70.0 | 70.0 | 60.3 | 70.0 |
| | 2'-6" | 70.0 | 70.0 | 70.0 | 70.0 | 54.3 | 70.0 |
| | 2'-9" | 70.0 | 70.0 | 70.0 | 70.0 | 49.4 | 70.0 |
| 12'-6" | 1'-9" | 70.0 | 70.0 | 70.0 | 70.0 | 70.0 | 70.0 |
| | 2'-0" | 70.0 | 70.0 | 70.0 | 70.0 | 67.9 | 70.0 |
| | 2'-3" | 70.0 | 70.0 | 70.0 | 70.0 | 60.3 | 70.0 |
| | 2'-6" | 70.0 | 70.0 | 70.0 | 70.0 | 54.3 | 70.0 |
| | 2'-9" | 70.0 | 70.0 | 70.0 | 70.0 | 49.4 | 70.0 |

**OPTION #2 : 3 FASTENERS CONNECTION**

| MAXIMUM MULLION SPAN | EFFECTIVE SPACING b = $S_5$/2 * | MAXIMUM A.S.D. DESIGN PRESSURE RATING (psf) | | | | | |
|---|---|---|---|---|---|---|---|
| | | POURED CONCRETE (Min. f'c = 3ksi) SUBSTRATE | | | GROUT FILLED CONCRETE BLOCK SUBSTRATE | | 1/4" Min. THK ASTM A-36 STEEL SUBSTRATE |
| | | FASTENER TYPES | | | FASTENER TYPES | | FASTENER |
| "L" (ft-in) | "b" (ft-in) | K | L | M | N | O | P |
| 8'-5" MAX. 12'-6" | 1'-9" | 70.0 | 70.0 | 70.0 | 70.0 | 70.0 | 70.0 |
| | 2'-0" | 70.0 | 70.0 | 70.0 | 70.0 | 70.0 | 70.0 |
| | 2'-3" | 70.0 | 70.0 | 70.0 | 70.0 | 70.0 | 70.0 |
| | 2'-6" | 70.0 | 70.0 | 70.0 | 70.0 | 70.0 | 70.0 |
| | 2'-9" | 70.0 | 70.0 | 70.0 | 70.0 | 70.0 | 70.0 |

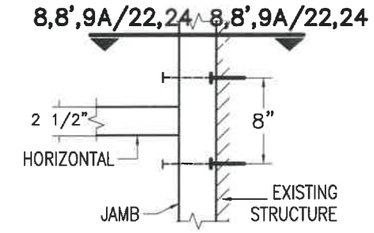


OPTION # 1 (ELEVATION)
(2) FASTENERS CONNECTION

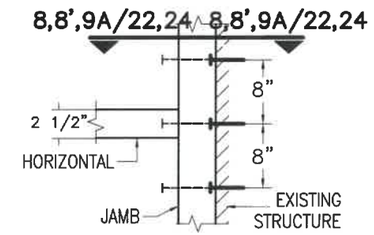


OPTION # 2 (ELEVATION)
(3) FASTENERS CONNECTION

* SEE SHEET 10 FOR EFFECTIVE SPACING DEFINITION AT ISOMETRIC.

**B FASTENER TYPES REQUIREMENTS:**

K - 1/2"Ø HILTI KWIK BOLT TZ ANCHOR W/ 2" Min. EMBEDMENT INTO POURED CONCRETE (Min. f'c = 3 ksi) BEYOND ANY FINISH MATERIAL, W/ 4" MIN. EDGE DISTANCE.

L - 1/2"Ø HILTI KWIK BOLT 3 ANCHOR W/ 3 1/2" Min. EMBEDMENT INTO POURED CONCRETE (Min. f'c = 3 ksi) BEYOND ANY FINISH MATERIAL, W/ 4" MIN. EDGE DISTANCE.

M - 1/2"Ø HILTI HUS-H SCREW ANCHOR W/ 3" Min. EMBEDMENT INTO POURED CONCRETE (Min. f'c = 3 ksi) BEYOND ANY FINISH MATERIAL, W/ 4" MIN. EDGE DISTANCE.

N - 1/2"Ø HILTI KWIK BOLT 3 ANCHOR W/ 3 1/2" Min. EMBEDMENT INTO GROUT FILLED CONCRETE BLOCK BEYOND ANY FINISH MATERIAL, W/ 4". EDGE DISTANCE.

O - 1/2"Ø HILTI HUS-H SCREW ANCHOR W/ 3" Min. EMBEDMENT INTO GROUT FILLED CONCRETE BLOCK BEYOND ANY FINISH MATERIAL, W/ 4" MIN. EDGE DISTANCE.

P - 1/2"Ø-13 TYPE "F" GRADE 5 BOLT TO 1/4" MIN. THK. ASTM A-36 STEEL W/ 1" MIN. EDGE DISTANCE OR 1/2"Ø -13 SAE GALVANIZED STEEL GRADE 5 HHB THRU BOLT W/ NUT & LOCK WASHER TO 1/4" MIN. THK. ASTM A-36 STEEL W/ 1" MIN. EDGE DISTANCE.

FLORIDA BUILDING CODE (High & Non High Velocity Hurricane Zone)

F.R.L
DRAWN BY

04/15/2021
DATE

21-069
DRAWING No

SHEET 17 OF 36

HR-251DG CAPTURED DRY GLAZED CURTAIN WALL SYSTEM LARGE MISSILE IMPACT INSULATED GLASS

Oldcastle BuildingEnvelope™
803 Airport Rd - Terrell, TX 75160
www.OldcastleBE.com - Phone 800-869-4567

| REV. No | DESCRIPTION | DATE | REV. No | DESCRIPTION | DATE |
|---|---|---|---|---|---|
| 1 | - | - | 3 | - | - |
| 2 | - | - | 4 | - | - |

©2021 TILTECO, INC

TILTECO INC.
TILLIT TESTING & ENGINEERING COMPANY
6355 N.W. 36th. St., Ste. 305, VIRGINIA GARDENS, FLORIDA 33166
Phone : (305)871-1530 , Fax : (305)871-1531
e-mail: tilteco@aol.com
CA-0006719
WALTER A. TILLIT Jr., P.E.
FLORIDA Lic. # 44167

WALTER A. TILLIT JR. LICENSE No. 44167 STATE OF FLORIDA PROFESSIONAL ENGINEER

P.E. SEAL/SIGNATURE/DATE

# HEAD CONNECTION DETAILS (SIDE VIEWS)

## SINGLE SPAN

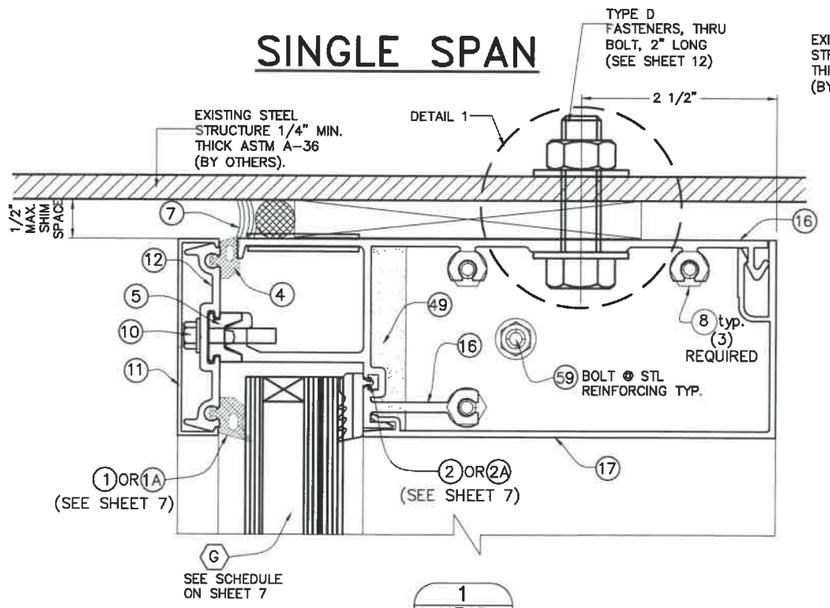


1 HEAD

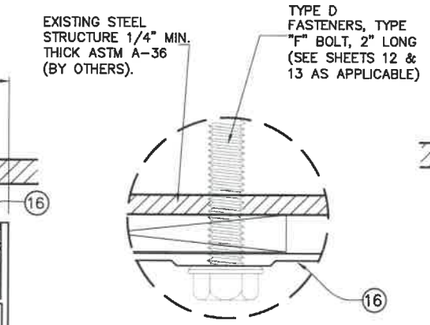


ALTERNATE FASTENER DETAIL 1

## TWIN SPAN

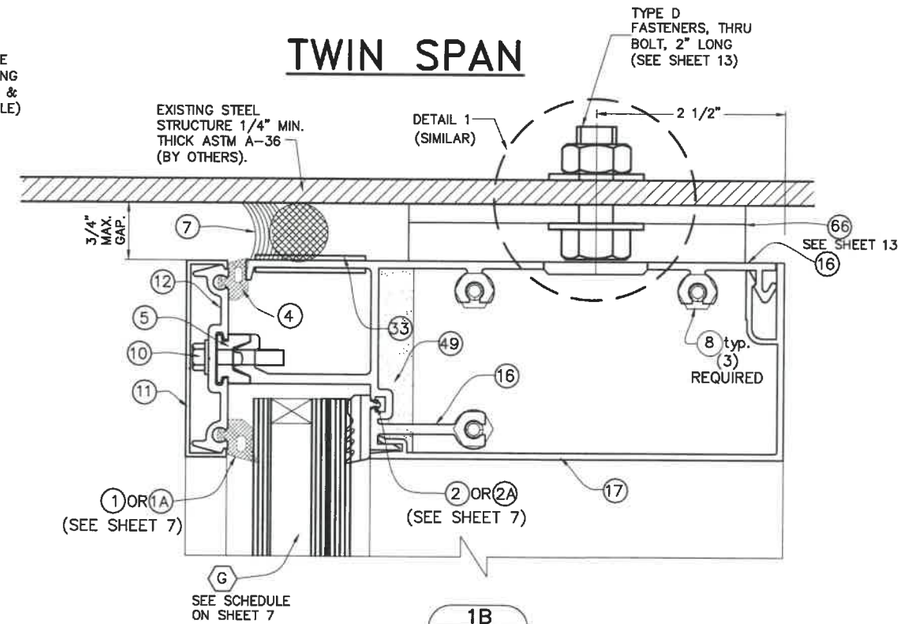


1B HEAD

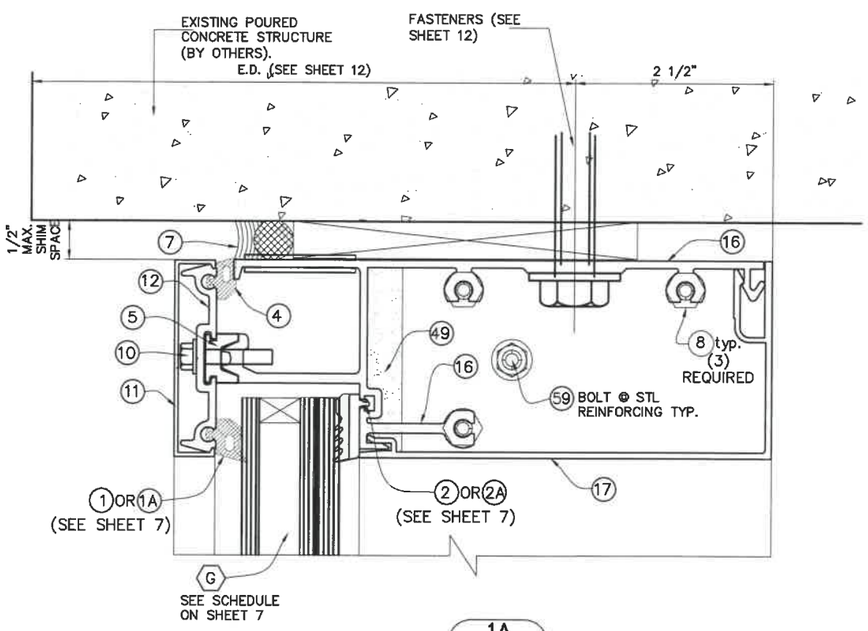


1A HEAD

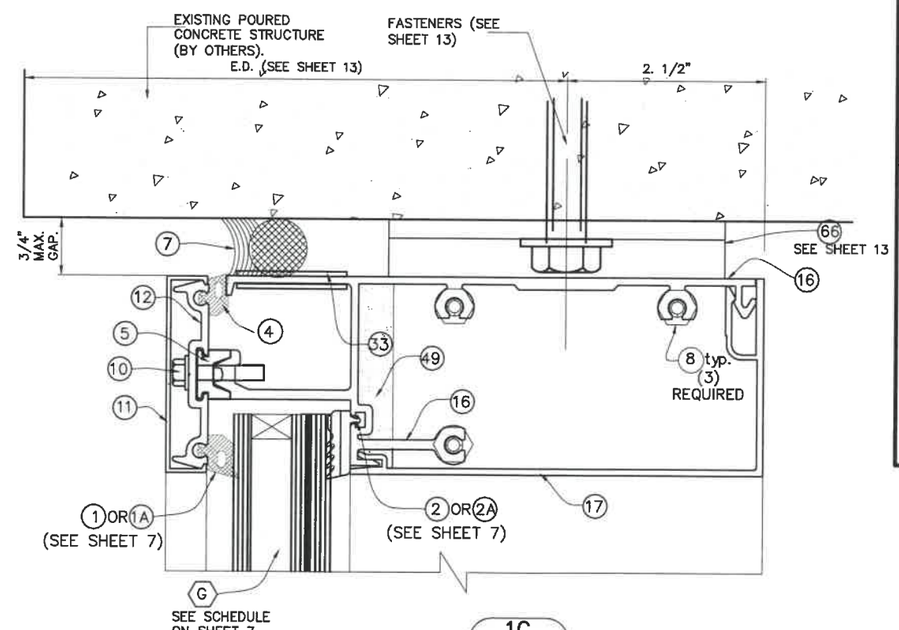


1C HEAD

NOTE: SEE ALSO DETAILS 1, 2, 3 & 4, & 18 ON SHEETS 25 & 28 RESPECTIVELY

FLORIDA BUILDING CODE (High & Non High Velocity Hurricane Zone)

©2021 TILTECO, INC

HR-251DG CAPTURED DRY GLAZED CURTAIN WALL SYSTEM LARGE MISSILE IMPACT INSULATED GLASS

Oldcastle BuildingEnvelope™
803 Airport Rd - Terrell, TX 75160
www.OldcastleBE.com - Phone 800-869-4567

| REV. No | DESCRIPTION | DATE | REV. No | DESCRIPTION | DATE |
|---|---|---|---|---|---|
| 1 | - | - | 3 | - | - |
| 2 | - | - | 4 | - | - |

F.R.L
DRAWN BY

04/15/2021
DATE

21-069
DRAWING No

SHEET 18 OF 36

TILTECO INC.
TILLIT TESTING & ENGINEERING COMPANY
6355 N.W. 36th. St. Ste. 305, VIRGINIA GARDENS, FLORIDA 33166
Phone : (305)871-1530 , Fax : (305)871-1531
e-mail: tilteco@aol.com
CA-0006719
WALTER A. TILLIT Jr., P.E.
FLORIDA Lic. # 44167

WALTER A. TILLIT JR. ★ LICENSE No. 44167 ★ STATE OF FLORIDA ★ PROFESSIONAL ENGINEER

P.E. SEAL/SIGNATURE/DATE

# HORIZONTAL CONNECTION DETAILS (SIDE VIEWS)

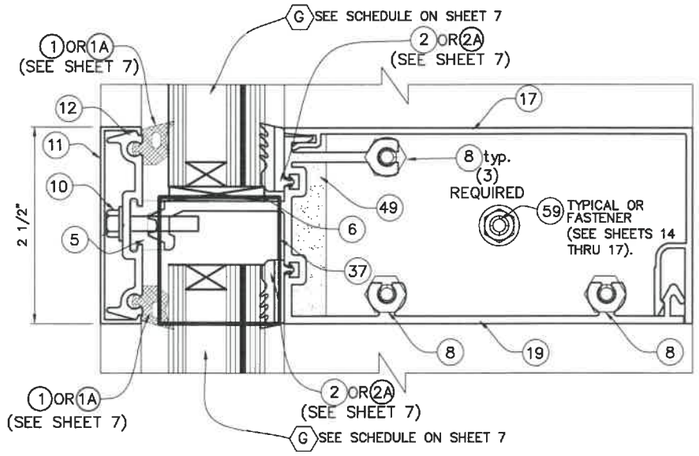


2
INT HORI

## AT SINGLE OR TWIN SPAN

### MAXIMUM A.S.D. DESIGN PRESSURE RATING FOR A GIVEN D.L.O., VALID FOR HORIZONTAL

| D.L.O.* (INCH) | MAX. A.S.D. DESIGN PRESSURE RATING (p.s.f.) | MISSILE TYPE |
|---|---|---|
| 74.0 OR LESS | 70.0 | LARGE |

*ORIENTED VERTICALLY

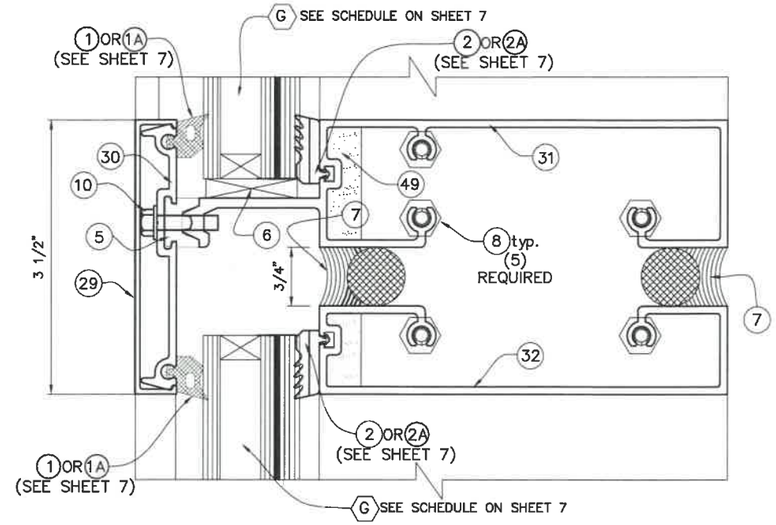


2A
INT HORI

## AT TWIN SPAN ONLY (EXPANSION HORIZONTALS)

### MAXIMUM A.S.D. DESIGN PRESSURE RATING FOR A GIVEN D.L.O., VALID FOR HORIZONTAL EXPANSION

| D.L.O.* (INCH) | MAX. A.S.D. DESIGN PRESSURE RATING (p.s.f.) |
|---|---|
| 74.0 | 53.5 |
| 69.5 OR LESS | 70.0 |

*ORIENTED VERTICALLY

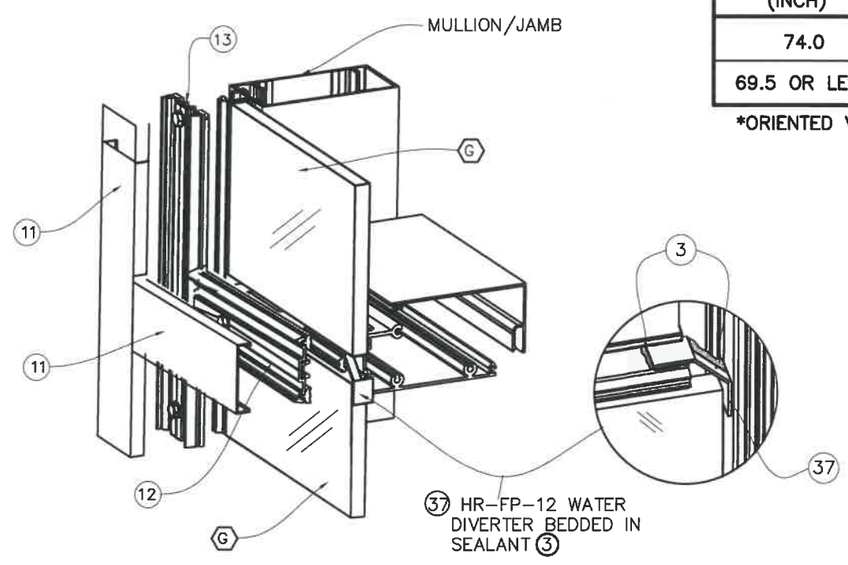


## DIVERTER 37 INSTALLATION DETAIL AT HORIZONTAL

FLORIDA BUILDING CODE (High & Non High Velocity Hurricane Zone)

HR-251DG CAPTURED DRY GLAZED CURTAIN WALL SYSTEM LARGE MISSILE IMPACT INSULATED GLASS

F.R.L. DRAWN BY

04/15/2021 DATE

21-069 DRAWING No

SHEET 19 OF 36

Oldcastle BuildingEnvelope™
803 Airport Rd - Terrell, TX 75160
www.OldcastleBE.com - Phone 800-869-4567

| REV. No | DESCRIPTION | DATE | REV. No | DESCRIPTION | DATE |
|---|---|---|---|---|---|
| 1 | - | - | 3 | - | - |
| 2 | - | - | 4 | - | - |

©2021 TILTECO, INC

TILTECO INC.
TILLIT TESTING & ENGINEERING COMPANY
6355 N.W. 36th. St., Ste. 305, VIRGINIA GARDENS, FLORIDA 33166
Phone : (305)871-1530 . Fax : (305)871-1531
e-mail: tilteco@aol.com
CA-0006719
WALTER A. TILLIT Jr., P.E.
FLORIDA Lic. # 44167

P.E. SEAL/SIGNATURE/DATE

WALTER A. TILLIT JR. LICENSE No. 44167 STATE OF FLORIDA PROFESSIONAL ENGINEER

# SILL CONNECTION DETAILS (SIDE VIEWS)

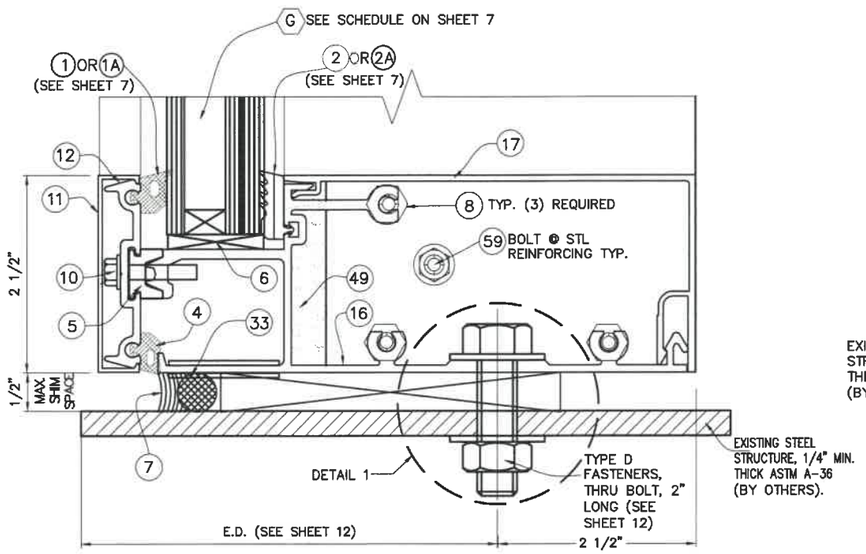


3
SILL

CONNECTION TO STEEL STRUCTURE

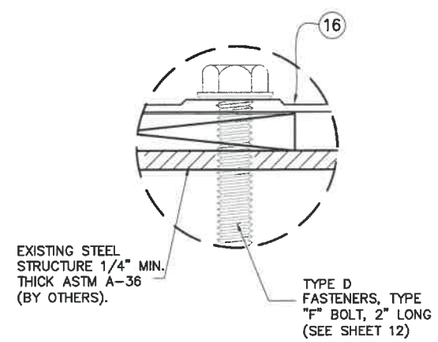


ALTERNATE FASTENER DETAIL 1

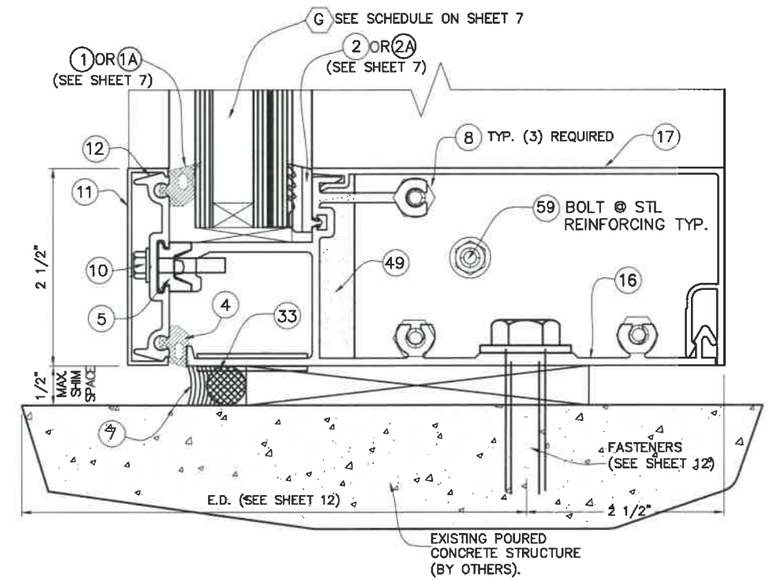


3
SILL

CONNECTION TO POURED CONCRETE STRUCTURE

NOTE: SEE ALSO DETAILS 1 THRU 4 ON SHEET 25

FLORIDA BUILDING CODE (High & Non High Velocity Hurricane Zone)

HR-251DG CAPTURED DRY GLAZED CURTAIN WALL SYSTEM LARGE MISSILE IMPACT INSULATED GLASS

F.R.L
DRAWN BY

04/15/2021
DATE

21-069
DRAWING No

SHEET 20 OF 36

Oldcastle BuildingEnvelope™
803 Airport Rd - Terrell, TX 75160
www.OldcastleBE.com - Phone 800-869-4567

| REV. No | DESCRIPTION | DATE | REV. No | DESCRIPTION | DATE |
|---|---|---|---|---|---|
| 1 | - | - | 3 | - | - |
| 2 | - | - | 4 | - | - |

©2021 TILTECO, INC

TILTECO INC.
TILLIT TESTING & ENGINEERING COMPANY
6355 N.W. 36th. St., Ste. 305, VIRGINIA GARDENS, FLORIDA 33166
Phone : (305)871-1530 . Fax : (305)871-1531
e-mail: tilteco@aol.com
CA-0006719
WALTER A. TILLIT Jr., P.E.
FLORIDA Lic. # 44167

P.E. SEAL/SIGNATURE/DATE

WALTER A. TILLIT JR. LICENSE No. 44167 STATE OF FLORIDA PROFESSIONAL ENGINEER

## END CAP & WATER DIVERTER SEALANT @ HORIZONTALS

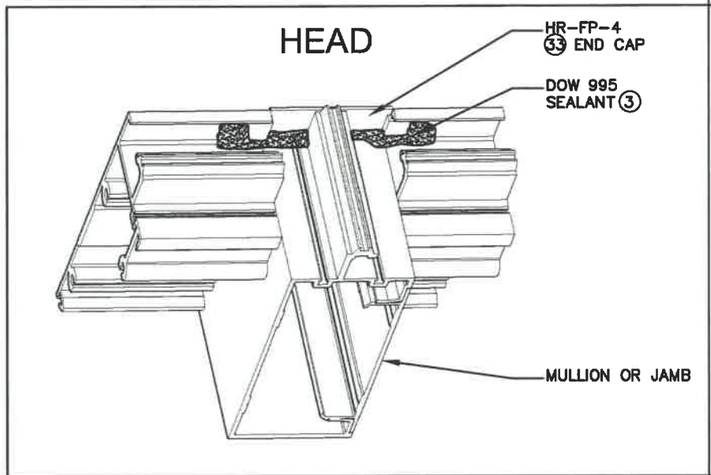


## DOW 995 SEALANT @ GASKET JOINT @ HORIZONTALS

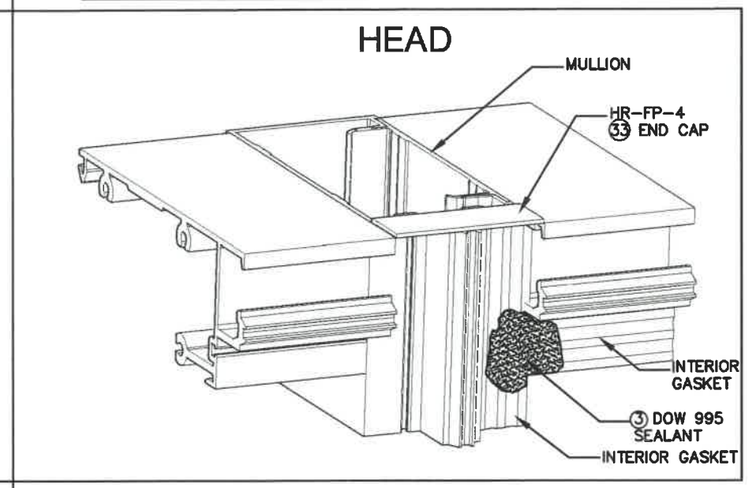


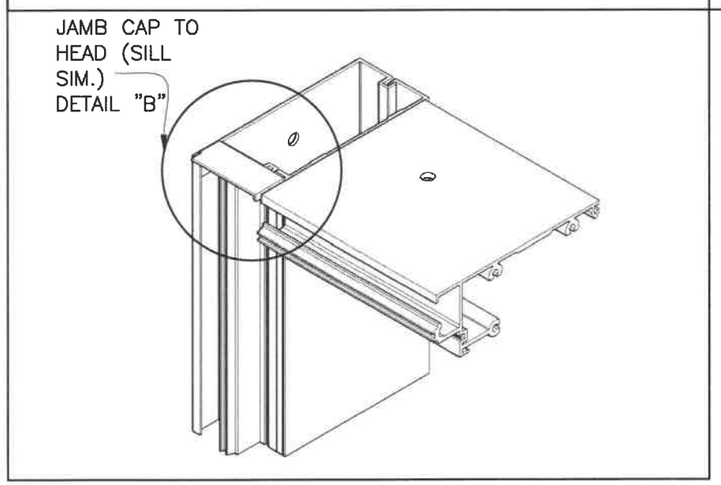


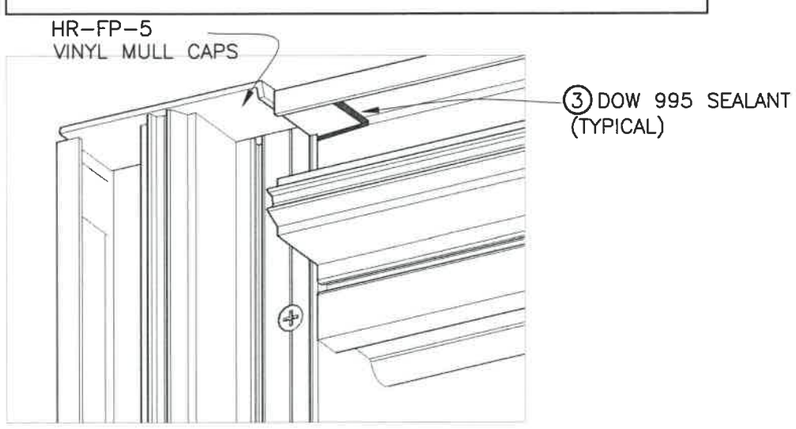


DETAIL "B"

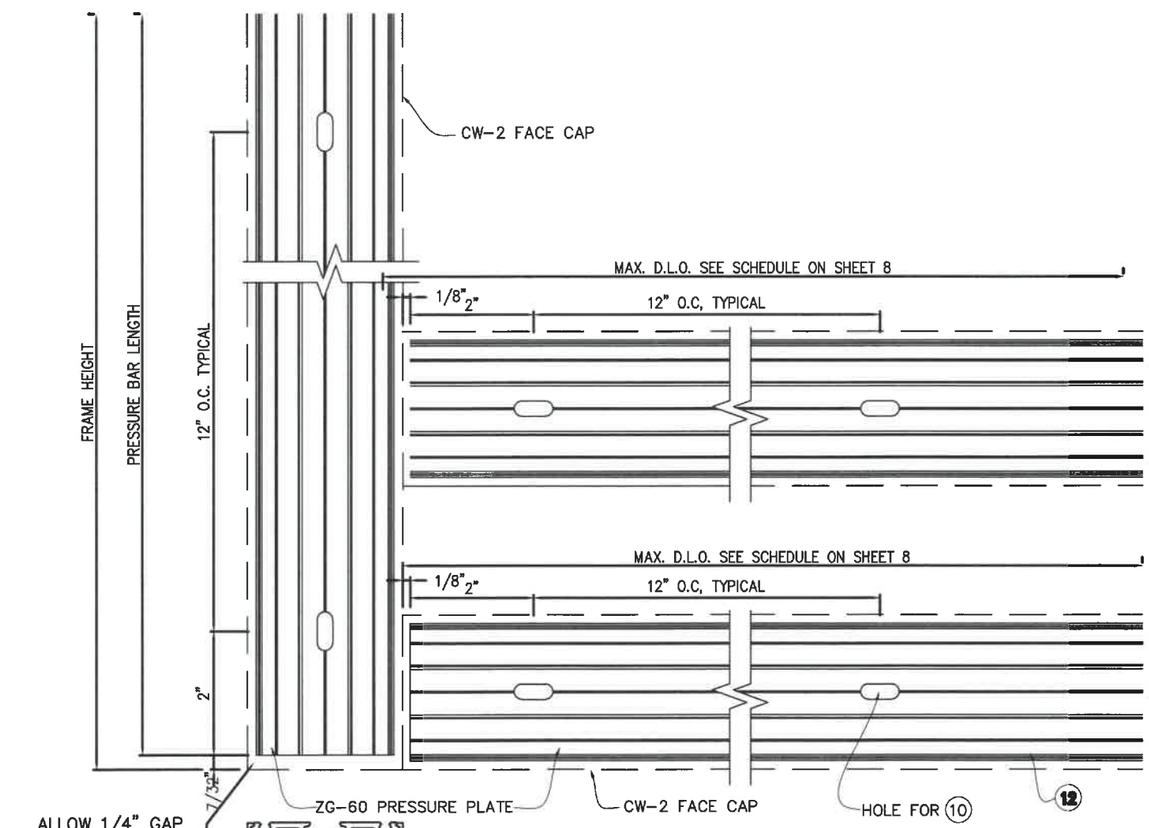


## TYPICAL PRESSURE PLATE FABRICATION (12)

FLORIDA BUILDING CODE (High & Non High Velocity Hurricane Zone)

HR-251DG CAPTURED DRY GLAZED CURTAIN WALL SYSTEM LARGE MISSILE IMPACT INSULATED GLASS

F.R.L
DRAWN BY

04/15/2021
DATE

21-069
DRAWING No

SHEET 20A OF 36

**Oldcastle** BuildingEnvelope™
803 Airport Rd - Terrell, TX 75160
www.OldcastleBE.com - Phone 800-869-4567

| REV. No | DESCRIPTION | DATE | REV. No | DESCRIPTION | DATE |
|---|---|---|---|---|---|
| 1 | - | - | 3 | - | - |
| 2 | - | - | 4 | - | - |

©2021 TILTECO, INC

TILTECO INC.
TILLIT TESTING & ENGINEERING COMPANY
6355 N.W. 36th. St. Ste. 305, VIRGINIA GARDENS, FLORIDA 33166
Phone : (305)871-1530 . Fax : (305)871-1531
e-mail: tilteco@aol.com
CA-0006719
WALTER A. TILLIT Jr., P.E.
FLORIDA Lic. # 44167

P.E. SEAL/SIGNATURE/DATE

WALTER A. TILLIT JR. LICENSE No. 44167 STATE OF FLORIDA PROFESSIONAL ENGINEER

# HORIZONTAL SECTION @ STANDARD MULLION DETAILS (PLAN)

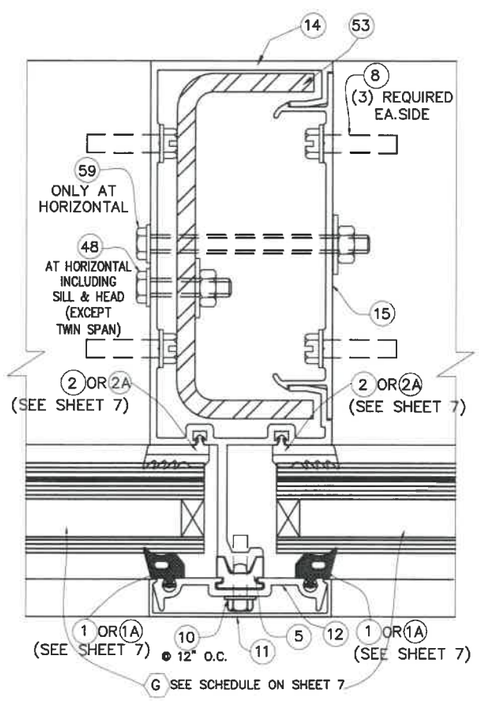


4
LIGHT MULLION W/STL

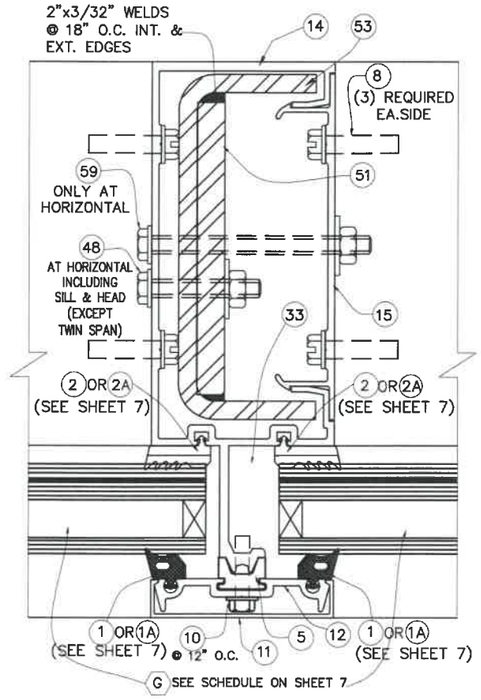


4A
LIGHT MULLION W/STL

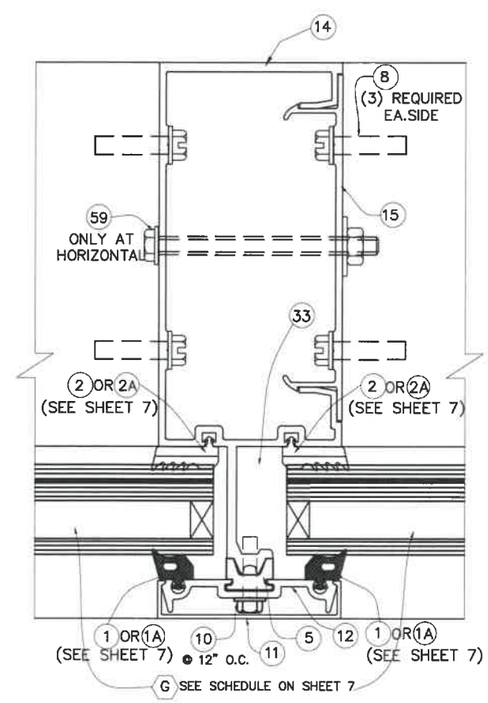


5
LIGHT MULLION W/O STL

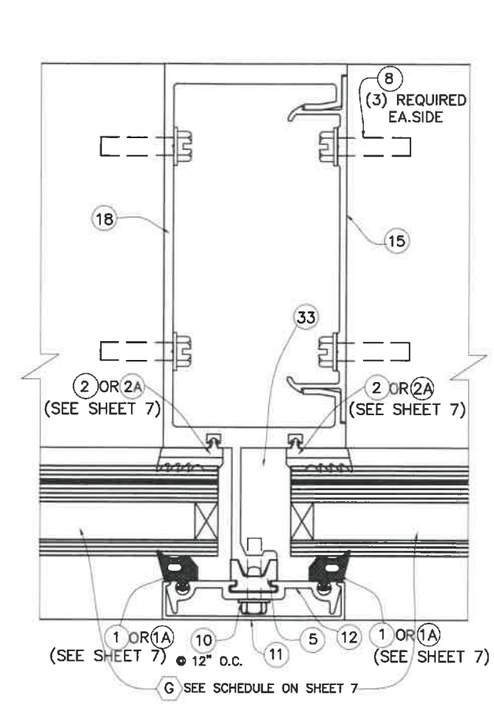


11
HEAVY MULLION

FLORIDA BUILDING CODE (High & Non High Velocity Hurricane Zone)

HR-251DG CAPTURED DRY GLAZED CURTAIN WALL SYSTEM LARGE MISSILE IMPACT INSULATED GLASS

F.R.L
DRAWN BY

04/15/2021
DATE

21-069
DRAWING No

SHEET 21 OF 36

Oldcastle BuildingEnvelope™
803 Airport Rd - Terrell, TX 75160
www.OldcastleBE.com - Phone 800-869-4567

| REV. No | DESCRIPTION | DATE | REV. No | DESCRIPTION | DATE |
|---|---|---|---|---|---|
| 1 | - | - | 3 | - | - |
| 2 | - | - | 4 | - | - |

©2021 TILTECO, INC

TILTECO INC.
TILLIT TESTING & ENGINEERING COMPANY
6355 N.W. 36th. St., Ste. 305, VIRGINIA GARDENS, FLORIDA 33166
Phone : (305)871-1530 , Fax : (305)871-1531
e-mail: tilteco@aol.com
CA-0006719
WALTER A. TILLIT Jr., P.E.
FLORIDA Lic. # 44167

P.E. SEAL/SIGNATURE/DATE

WALTER A. TILLIT JR. LICENSE No. 44167 STATE OF FLORIDA PROFESSIONAL ENGINEER

# JAMB CONNECTIONS AT HORIZONTALS (PLAN)

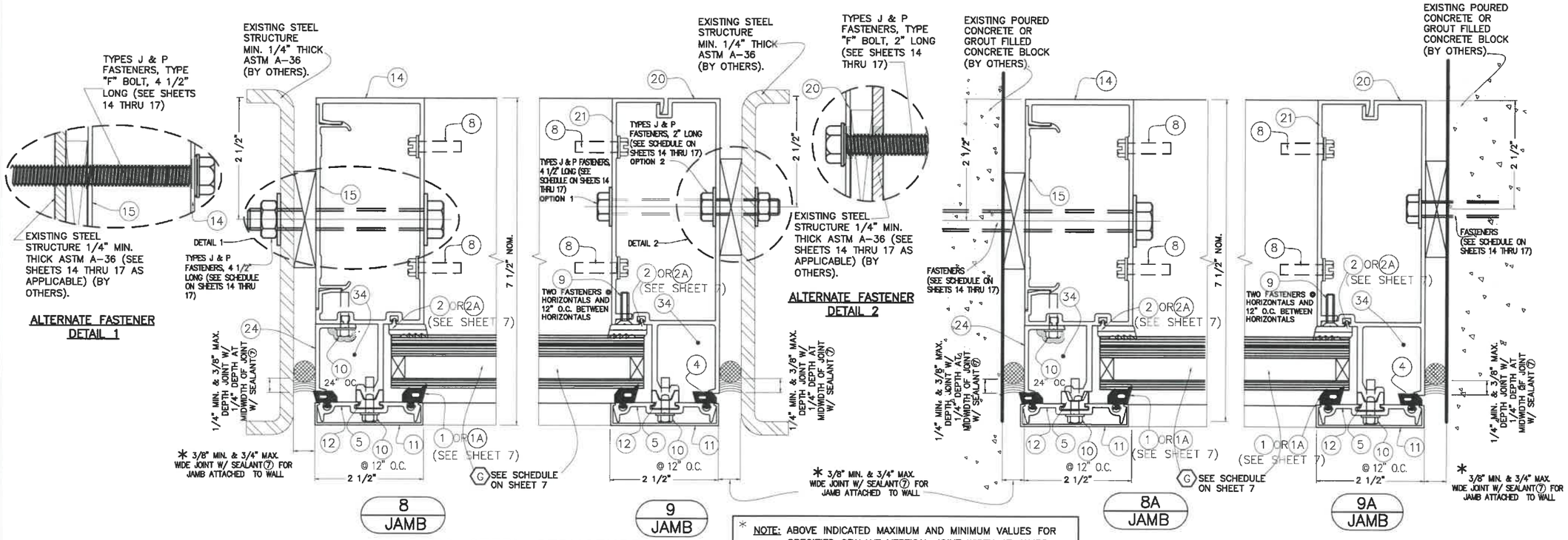


* NOTE: ABOVE INDICATED MAXIMUM AND MINIMUM VALUES FOR SPECIFIED SEALANT VERTICAL JOINT WIDTH AT JAMBS CONNECTED TO WALL HAVE BEEN DETERMINED ONLY TAKING INTO CONSIDERATION THE ACTUAL MOVEMENT OF GLASS WALL AT JAMBS DUE TO THERMAL, WIND AND ITS OWN CONSTRUCTION TOLERANCE, AND NOT PERFORMANCE FACTORS FROM THE SURROUNDING STRUCTURE.

FLORIDA BUILDING CODE (High & Non High Velocity Hurricane Zone)

HR-251DG CAPTURED DRY GLAZED CURTAIN WALL SYSTEM LARGE MISSILE IMPACT INSULATED GLASS

F.R.L DRAWN BY

04/15/2021 DATE

21-069 DRAWING No

SHEET 22 OF 36

| REV. No | DESCRIPTION | DATE | REV. No | DESCRIPTION | DATE |
|---|---|---|---|---|---|
| 1 | - | - | 3 | - | - |
| 2 | - | - | 4 | - | - |

Oldcastle BuildingEnvelope™
803 Airport Rd - Terrell, TX 75160
www.OldcastleBE.com - Phone 800-869-4567

©2021 TILTECO, INC

TILTECO INC.
TILLIT TESTING & ENGINEERING COMPANY
6355 N.W. 36th. St., Ste. 305, VIRGINIA GARDENS, FLORIDA 33166
Phone : (305)871-1530 , Fax : (305)871-1531
e-mail: tilteco@aol.com
CA-0006719
WALTER A. TILLIT Jr., P.E.
FLORIDA Lic. # 44167

P.E. SEAL/SIGNATURE/DATE

WALTER A. TILLIT JR. LICENSE No. 44167 STATE OF FLORIDA PROFESSIONAL ENGINEER

## JAMB MULLIONS NOT ATTACHED TO EXISTING STRUCTURE FOR SINGLE SPAN ONLY (PLAN)

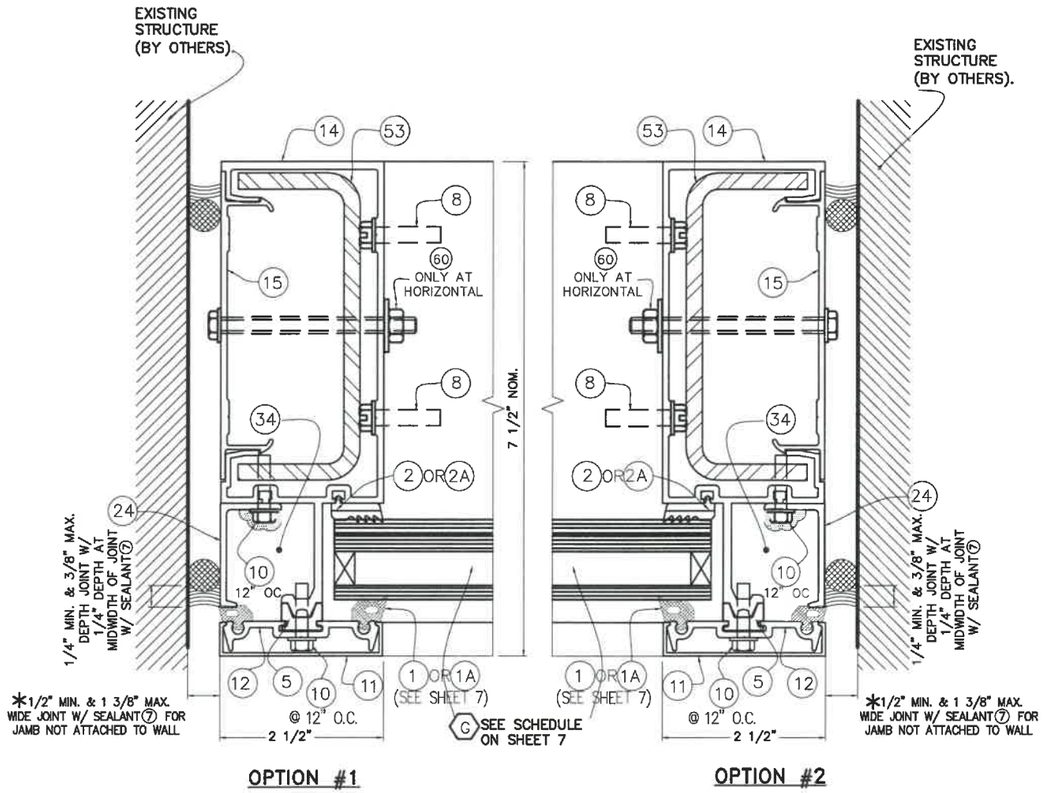


8B
JAMB

* NOTE: ABOVE INDICATED MAXIMUM AND MINIMUM VALUES FOR SPECIFIED SEALANT VERTICAL JOINT WIDTH AT JAMBS NOT CONNECTED TO WALL (FREE STANDING) HAVE BEEN DETERMINED ONLY TAKING INTO CONSIDERATION THE ACTUAL MOVEMENT OF GLASS WALL AT JAMBS DUE TO THERMAL, WIND AND ITS OWN CONSTRUCTION TOLERANCE, AND NOT PERFORMANCE FACTORS FROM THE SURROUNDING STRUCTURE.

## HR-251DG SINGLE SPAN JAMB MULLION W/O ANCHORAGE

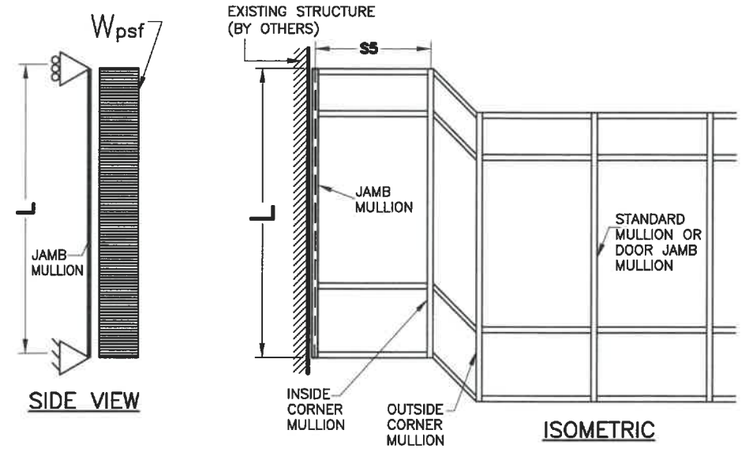


L = SINGLE SPAN JAMB MULLION; S5 = WIDTH OF JAMB MULLION GLASS PANEL

EFFECTIVE SPACING $b = \frac{S_5}{2}$ (SEE SCHEDULE)

## MAXIMUM A.S.D. DESIGN PRESSURE RATING FOR SINGLE SPAN REINFORCED JAMB MULLIONS W/O ANCHORAGE TO STRUCTURE

MAXIMUM SINGLE SPAN REINFORCED JAMB MULLION "L"(ft) SCHEDULE FOR A GIVEN A.S.D. DESIGN PRESSURE RATING (psf) AND A GIVEN EFFECTIVE SPACING "b" (ft-in)

| MAXIMUM A.S.D. DESIGN PRESSURE RATING (psf) | EFFECTIVE SPACING b = S5/2 "b" (ft-in) | JAMB W/O CONNECTION SPAN LF (ft-in) |
|---|---|---|
| 70.0 or less | 1'- 9" | 12'- 6" |
| | 2'- 0" | 12'- 6" |
| | 2'- 3" | 12'- 6" |
| | 2'- 6" | 12'- 6" |
| | 2'- 9" | 12'- 6" |
| | 3'- 0" | 12'- 6" |
| | 3'- 3" | 12'- 6" |

* VALID ONLY FOR LARGE MISSILE ZONE INSTALLATION

FLORIDA BUILDING CODE (High & Non High Velocity Hurricane Zone)

HR-251DG CAPTURED DRY GLAZED CURTAIN WALL SYSTEM LARGE MISSILE IMPACT INSULATED GLASS

F.R.L. DRAWN BY | 04/15/2021 DATE | 21—069 DRAWING No | SHEET 22A OF 36

Oldcastle BuildingEnvelope™
803 Airport Rd - Terrell, TX 75160
www.OldcastleBE.com - Phone 800-869-4567

| REV. No | DESCRIPTION | DATE | REV. No | DESCRIPTION | DATE |
|---|---|---|---|---|---|
| 1 | - | - | 3 | - | - |
| 2 | - | - | 4 | - | - |

©2021 TILTECO, INC

TILTECO INC.
TILLIT TESTING & ENGINEERING COMPANY
6355 N.W. 36th. St., Ste. 305, VIRGINIA GARDENS, FLORIDA 33166
Phone : (305)871-1530 . Fax : (305)871-1531
e-mail: tilteco@aol.com
CA-0006719
WALTER A. TILLIT Jr., P.E.
FLORIDA Lic. # 44167

P.E. SEAL/SIGNATURE/DATE

WALTER A. TILLIT JR. LICENSE No. 44167 STATE OF FLORIDA PROFESSIONAL ENGINEER

# CORNER MULLION DETAILS (PLAN)

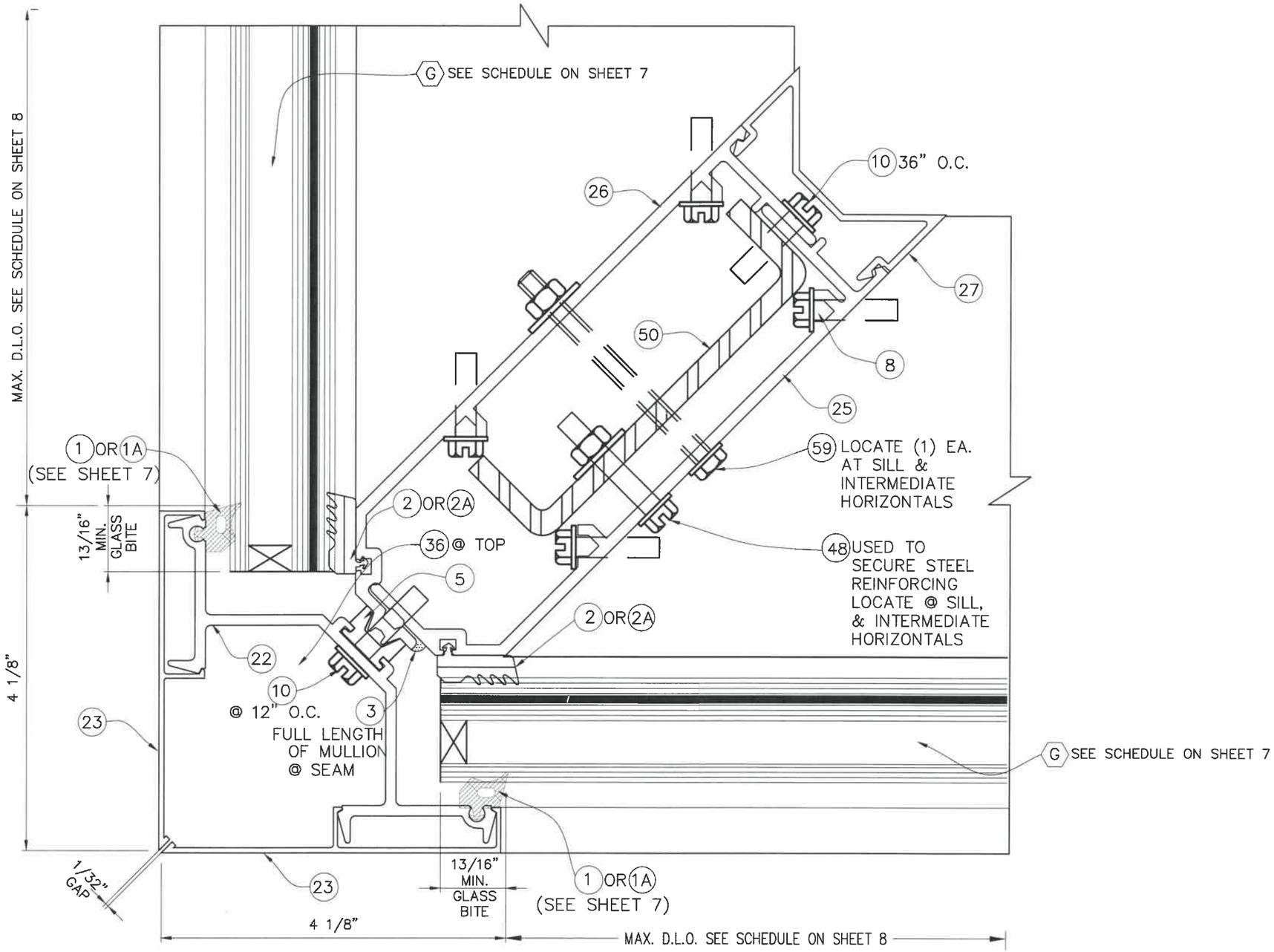


14
90 DEG CORNER CAPTURED PLAN

FLORIDA BUILDING CODE (High & Non High Velocity Hurricane Zone)

HR-251DG CAPTURED DRY GLAZED CURTAIN WALL SYSTEM LARGE MISSILE IMPACT INSULATED GLASS

F.R.L
DRAWN BY

04/15/2021
DATE

21-069
DRAWING No

SHEET 23 OF 36

Oldcastle BuildingEnvelope™
803 Airport Rd - Terrell, TX 75160
www.OldcastleBE.com - Phone 800-869-4567

| REV. No | DESCRIPTION | DATE | REV. No | DESCRIPTION | DATE |
|---|---|---|---|---|---|
| 1 | - | - | 3 | - | - |
| 2 | - | - | 4 | - | - |

©2021 TILTECO, INC

TILTECO INC.
TILLIT TESTING & ENGINEERING COMPANY
6355 N.W. 36th. St., Ste. 305, VIRGINA GARDENS, FLORIDA 33166
Phone : (305)871-1530 . Fax : (305)871-1531
e-mail: tilteco@aol.com
CA-0006719
WALTER A. TILLIT Jr., P.E.
FLORIDA Lic. # 44167

P.E. SEAL/SIGNATURE/DATE

WALTER A. TILLIT JR. LICENSE No. 44167 STATE OF FLORIDA PROFESSIONAL ENGINEER

# JAMBS CONNECTIONS AT INSIDE CORNER (PLAN)

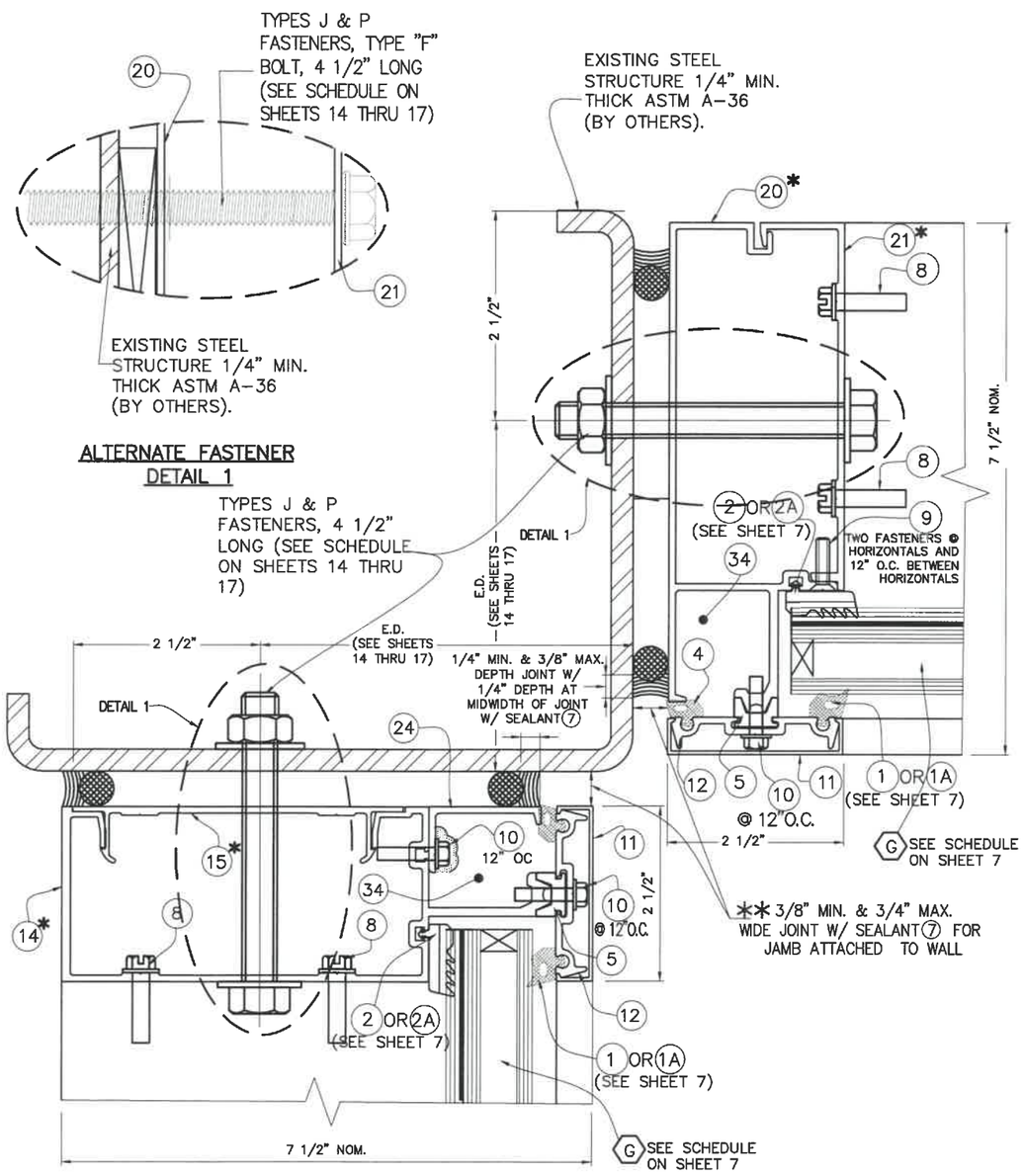


8, 9 @ INSIDE CORNER
JAMB TO EXISTING STEEL (PLAN)

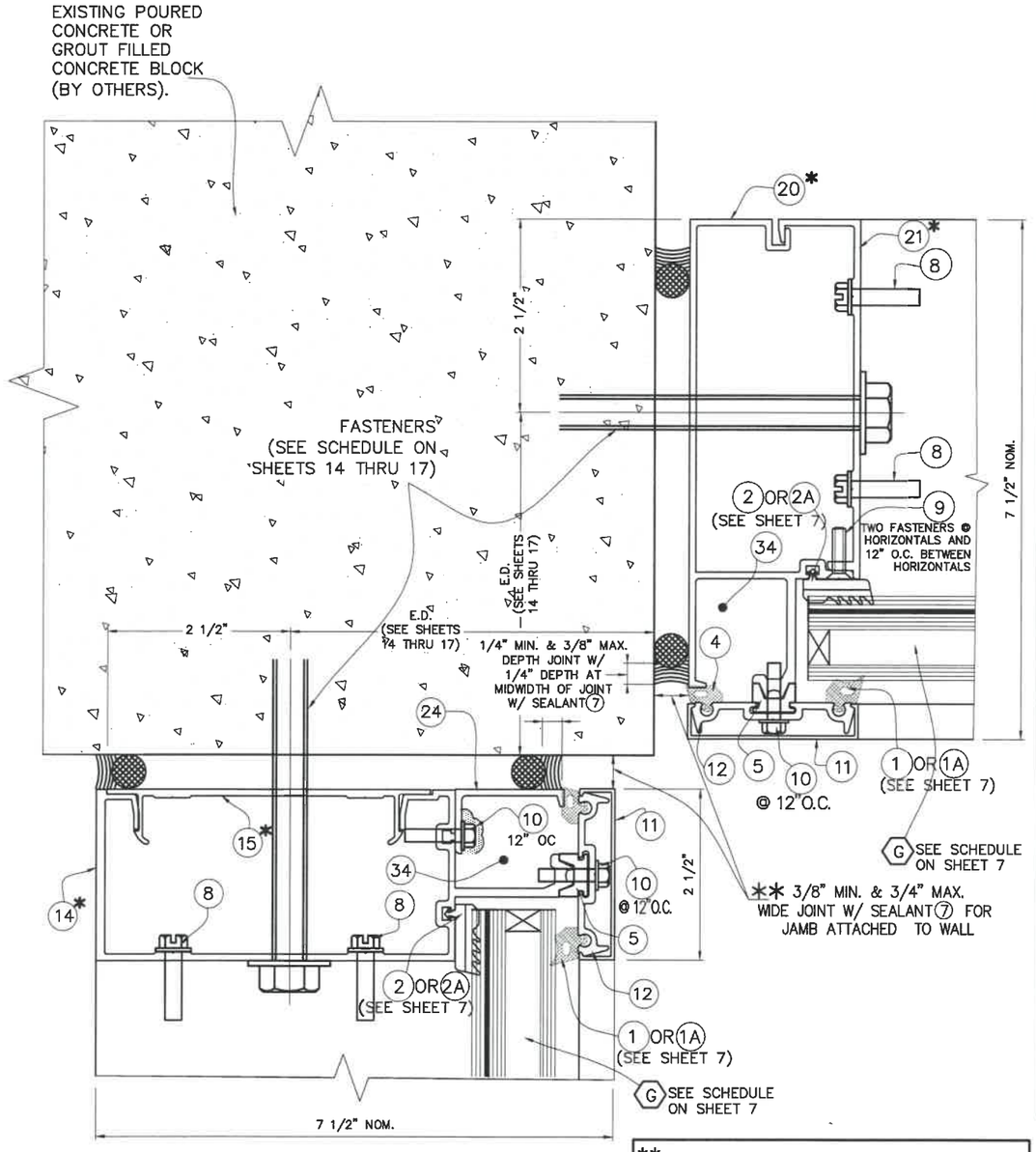


8A, 9A @ INSIDE CORNER
JAMB TO POURED CONCRETE (PLAN)

* JAMBS MAY BE 14 + 15 OR 20 + 21 INTERCHANGABLE

** NOTE: ABOVE INDICATED MAXIMUM AND MINIMUM VALUES FOR SPECIFIED SEALANT VERTICAL JOINT WIDTH AT JAMBS CONNECTED TO WALL HAVE BEEN DETERMINED ONLY TAKING INTO CONSIDERATION THE ACTUAL MOVEMENT OF GLASS WALL AT JAMBS DUE TO THERMAL, WIND AND ITS OWN CONSTRUCTION TOLERANCE, AND NOT PERFORMANCE FACTORS FROM THE SURROUNDING STRUCTURE.

FLORIDA BUILDING CODE (High & Non High Velocity Hurricane Zone)

HR-251DG CAPTURED DRY GLAZED CURTAIN WALL SYSTEM LARGE MISSILE IMPACT INSULATED GLASS

| DRAWN BY | DATE | DRAWING No | SHEET |
|---|---|---|---|
| F.R.L | 04/15/2021 | 21-069 | 24 OF 36 |

Oldcastle BuildingEnvelope™
803 Airport Rd - Terrell, TX 75160
www.OldcastleBE.com - Phone 800-869-4567

| REV. No | DESCRIPTION | DATE | REV. No | DESCRIPTION | DATE |
|---|---|---|---|---|---|
| 1 | - | - | 3 | - | - |
| 2 | - | - | 4 | - | - |

©2021 TILTECO, INC

TILTECO INC.
TILLIT TESTING & ENGINEERING COMPANY
6355 N.W. 36th. St., Ste. 305, VIRGINIA GARDENS, FLORIDA 33166
Phone : (305)871-1530 , Fax : (305)871-1531
e-mail: tilteco@aol.com
CA-0006719
WALTER A. TILLIT Jr., P.E.
FLORIDA Lic. # 44167

P.E. SEAL/SIGNATURE/DATE

WALTER A. TILLIT JR. LICENSE No. 44167 STATE OF FLORIDA PROFESSIONAL ENGINEER

# JAMB MULLIONS NOT ATTACHED TO INSIDE CORNER OF EXISTING STRUCTURE FOR SINGLE SPAN ONLY (PLAN)

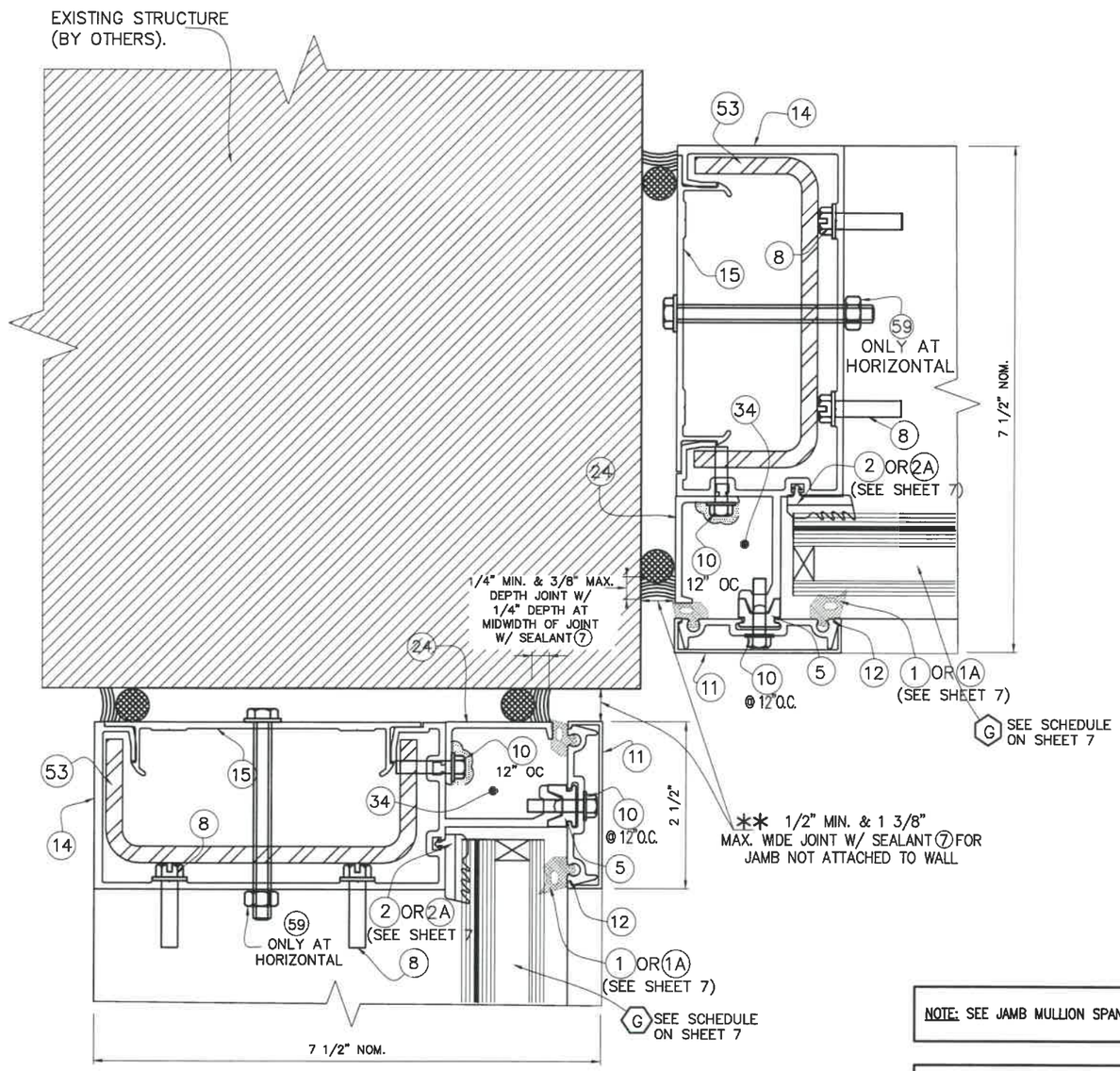


8B @ INSIDE CORNER
JAMB MULLION TO EXISTING
STRUCTURE (PLAN)

NOTE: SEE JAMB MULLION SPAN SCHEDULE ON SHEET 22A.

** NOTE: ABOVE INDICATED MAXIMUM AND MINIMUM VALUES FOR SPECIFIED SEALANT VERTICAL JOINT WIDTH AT JAMBS NOT CONNECTED TO WALL (FREE STANDING) HAVE BEEN DETERMINED ONLY TAKING INTO CONSIDERATION THE ACTUAL MOVEMENT OF GLASS WALL AT JAMBS DUE TO THERMAL, WIND AND ITS OWN CONSTRUCTION TOLERANCE, AND NOT PERFORMANCE FACTORS FROM THE SURROUNDING STRUCTURE.

FLORIDA BUILDING CODE (High & Non High Velocity Hurricane Zone)

©2021 TILTECO, INC

HR-251DG CAPTURED DRY GLAZED CURTAIN WALL
SYSTEM LARGE MISSILE IMPACT INSULATED GLASS

F.R.L
DRAWN BY

04/15/2021
DATE

21-069
DRAWING No

SHEET 24A OF 36

Oldcastle BuildingEnvelope™
803 Airport Rd - Terrell, TX 75160
www.OldcastleBE.com - Phone 800-869-4567

| REV. No | DESCRIPTION | DATE | REV. No | DESCRIPTION | DATE |
|---|---|---|---|---|---|
| 1 | - | - | 3 | - | - |
| 2 | - | - | 4 | - | - |

TILTECO INC.
TILLIT TESTING & ENGINEERING COMPANY
6355 N.W. 36th. St. Ste. 305, VIRGINIA GARDENS, FLORIDA 33166
Phone : (305)871-1530 , Fax : (305)871-1531
e-mail: tilteco@aol.com
CA-0006719
WALTER A. TILLIT Jr., P.E.
FLORIDA Lic. # 44167

P.E. SEAL/SIGNATURE/DATE

WALTER A. TILLIT JR. ★ LICENSE No. 44167 ★ STATE OF FLORIDA ★ PROFESSIONAL ENGINEER

# SILL & HEAD CONNECTION DETAILS AT SINGLE SPAN & SILL CONNECTION DETAIL FOR TWIN SPAN (PLANS)

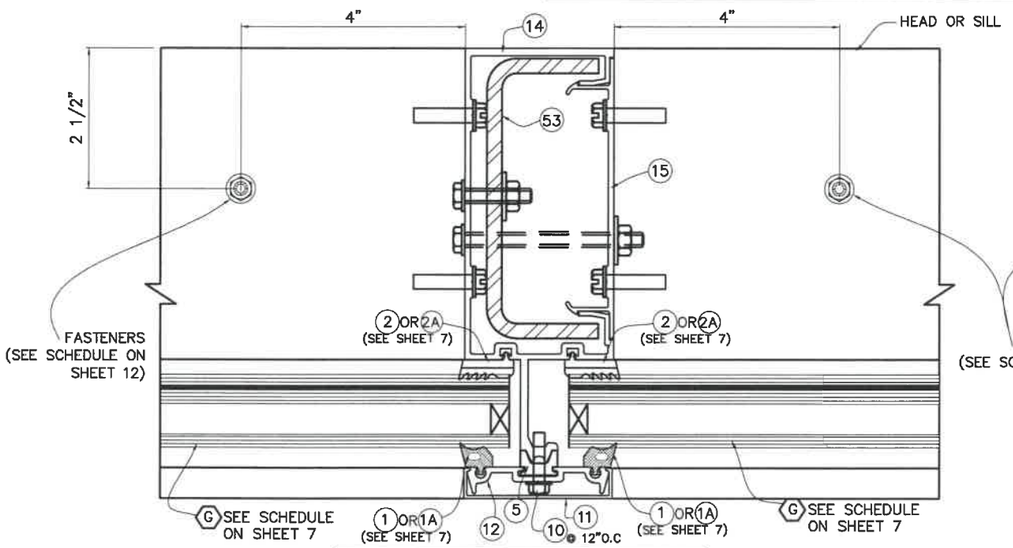


1

**CONNECTION AT INTERIOR MULLION**

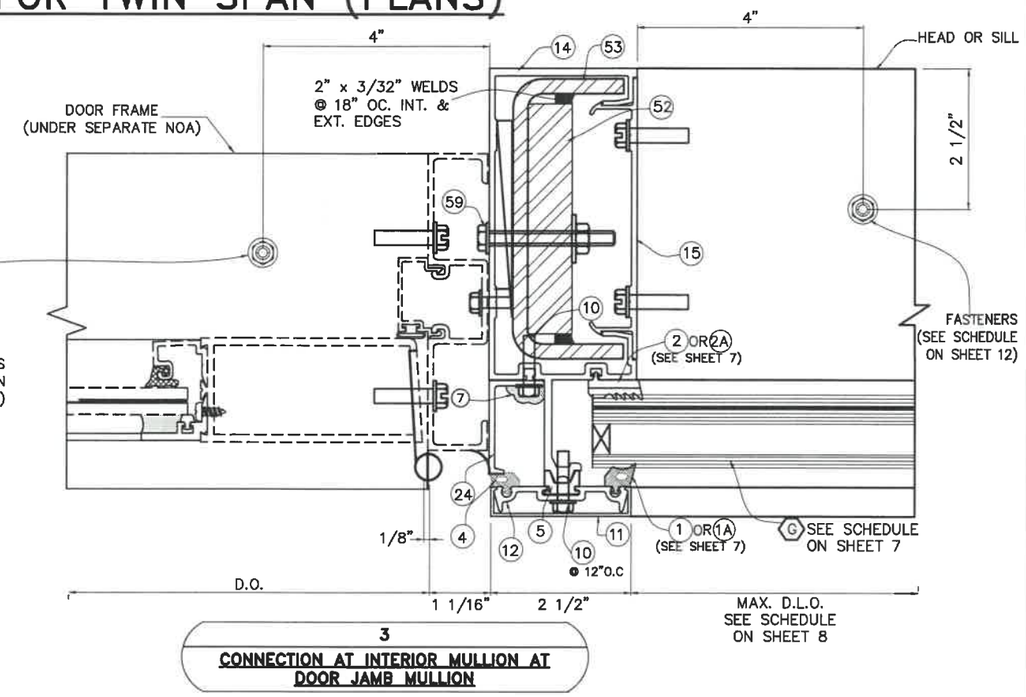


3

**CONNECTION AT INTERIOR MULLION AT DOOR JAMB MULLION**

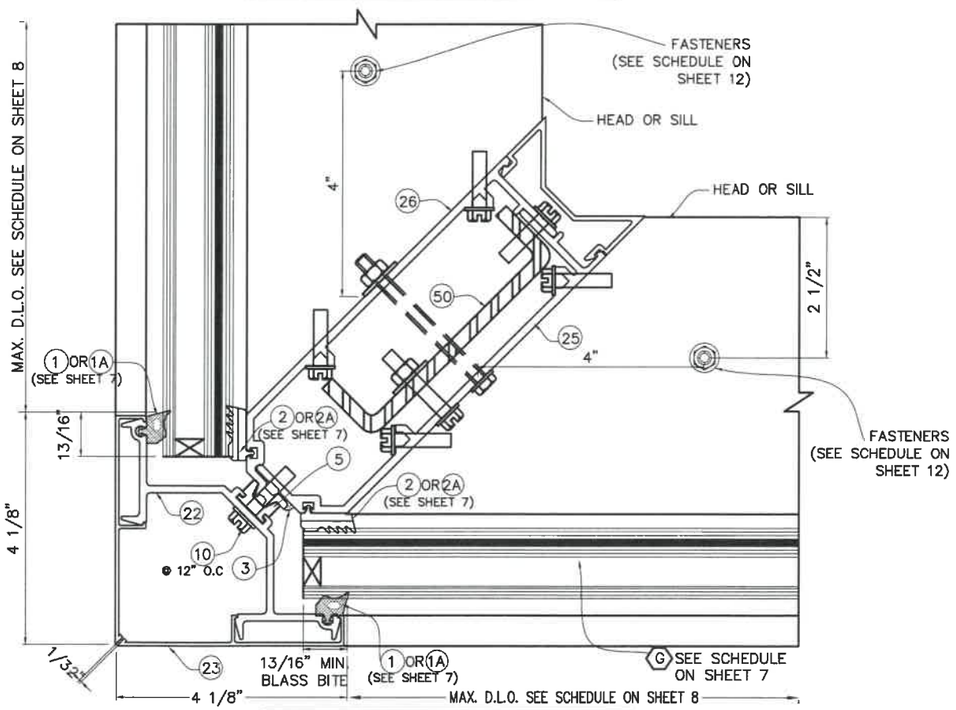


2

**CONNECTION AT CORNER MULLION**

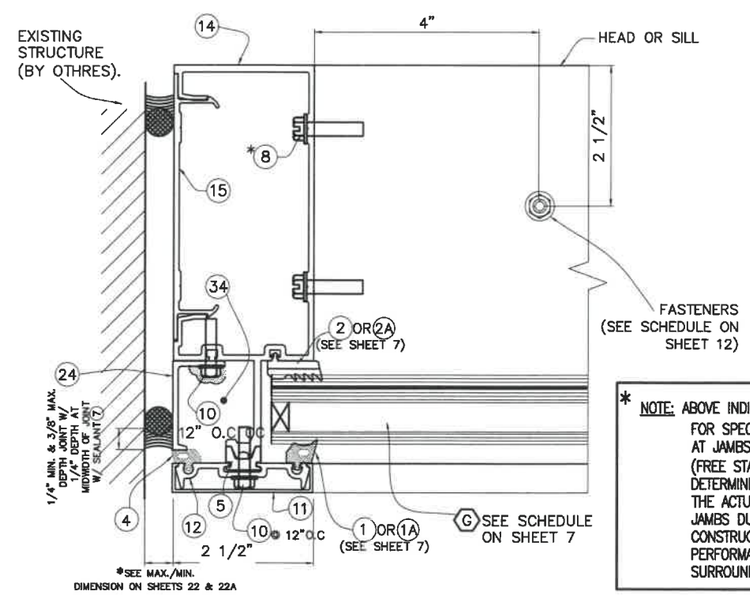


4

**CONNECTION AT JAMBS**

* NOTE: ABOVE INDICATED MAXIMUM AND MINIMUM VALUES FOR SPECIFIED SEALANT VERTICAL JOINT WIDTH AT JAMBS CONNECTED AND NOT CONNECTED (FREE STANDING) TO WALL HAVE BEEN DETERMINED ONLY TAKING INTO CONSIDERATION THE ACTUAL MOVEMENT OF GLASS WALL AT JAMBS DUE TO THERMAL, WIND AND ITS OWN CONSTRUCTION TOLERANCE, AND NOT PERFORMANCE FACTORS FROM THE SURROUNDING STRUCTURE.

**FLORIDA BUILDING CODE (High & Non High Velocity Hurricane Zone)**

HR-251DG CAPTURED DRY GLAZED CURTAIN WALL SYSTEM LARGE MISSILE IMPACT INSULATED GLASS

F.R.L
DRAWN BY

04/15/2021
DATE

21-069
DRAWING No

SHEET 25 OF 36

**Oldcastle** BuildingEnvelope™
803 Airport Rd - Terrell, TX 75160
www.OldcastleBE.com - Phone 800-869-4567

| REV. No | DESCRIPTION | DATE | REV. No | DESCRIPTION | DATE |
|---|---|---|---|---|---|
| 1 | - | - | 3 | - | - |
| 2 | - | - | 4 | - | - |

©2021 TILTECO, INC

TILTECO INC.
TILLIT TESTING & ENGINEERING COMPANY
6355 N.W. 36th. St., Ste. 305, VIRGINIA GARDENS, FLORIDA 33166
Phone : (305)871-1530 - Fax : (305)871-1531
e-mail: tilteco@aol.com
CA-0006719
WALTER A. TILLIT Jr., P.E.
FLORIDA Lic. # 44167

P.E. SEAL/SIGNATURE/DATE

WALTER A. TILLIT JR. LICENSE No. 44167 STATE OF FLORIDA PROFESSIONAL ENGINEER

# OPTION #1 FOR HEAD CONNECTION OF TWIN SPAN STANDARD MULLIONS

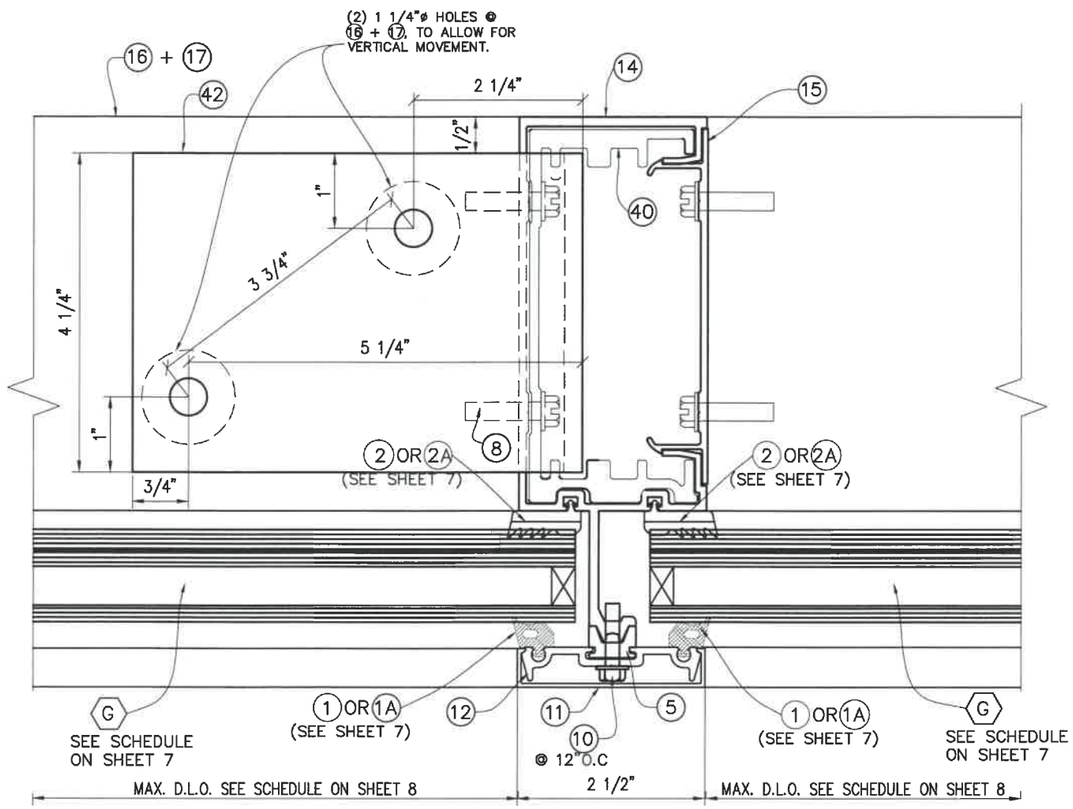


1

17
HEAD ANCHOR (PLAN)

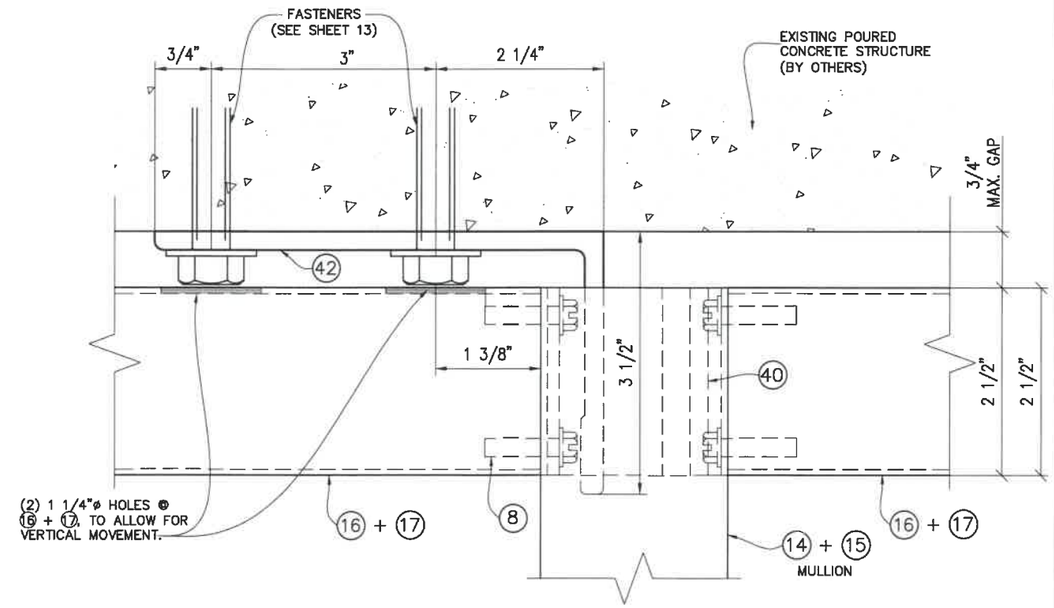


## TO EXISTING POURED CONCRETE STRUCTURE

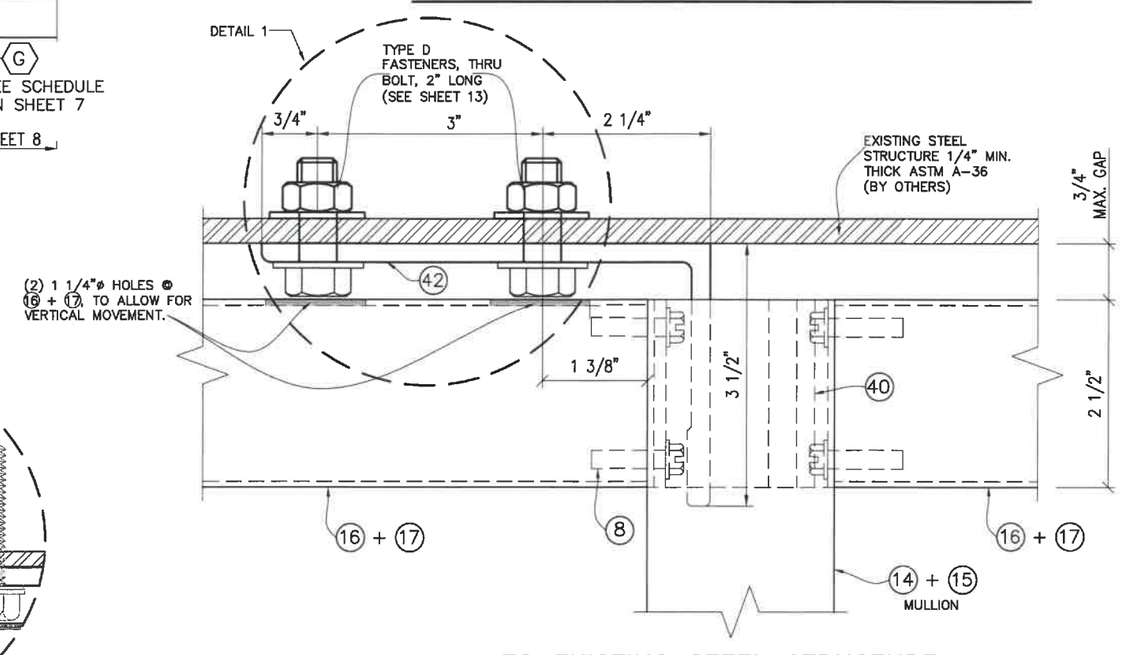


## TO EXISTING STEEL STRUCTURE

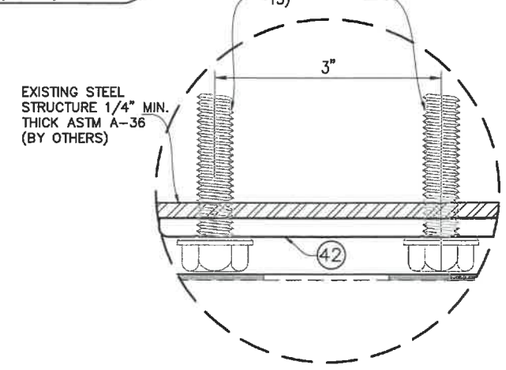


ALTERNATE FASTENER DETAIL 1

## EXTERIOR ELEVATIONS 1

FLORIDA BUILDING CODE (High & Non High Velocity Hurricane Zone)

©2021 TILTECO, INC

TILTECO INC.
TILLIT TESTING & ENGINEERING COMPANY
6355 N.W. 36th. St., Ste. 305, VIRGINIA GARDENS, FLORIDA 33166
Phone : (305)871-1530 , Fax : (305)871-1531
e-mail: tilteco@aol.com
CA-0006719
WALTER A. TILLIT Jr., P.E.
FLORIDA Lic. # 44167

P.E. SEAL/SIGNATURE/DATE

WALTER A. TILLIT JR. LICENSE No. 44167 STATE OF FLORIDA PROFESSIONAL ENGINEER

HR-251DG CAPTURED DRY GLAZED CURTAIN WALL SYSTEM LARGE MISSILE IMPACT INSULATED GLASS

Oldcastle BuildingEnvelope™
803 Airport Rd - Terrell, TX 75160
www.OldcastleBE.com - Phone 800-869-4567

| REV. No | DESCRIPTION | DATE | REV. No | DESCRIPTION | DATE |
|---|---|---|---|---|---|
| 1 | - | - | 3 | - | - |
| 2 | - | - | 4 | - | - |

F.R.L. DRAWN BY

04/15/2021 DATE

21-069 DRAWING No

SHEET 26 OF 36

# OPTION #2 FOR HEAD CONNECTION OF TWIN SPAN STANDARD MULLIONS

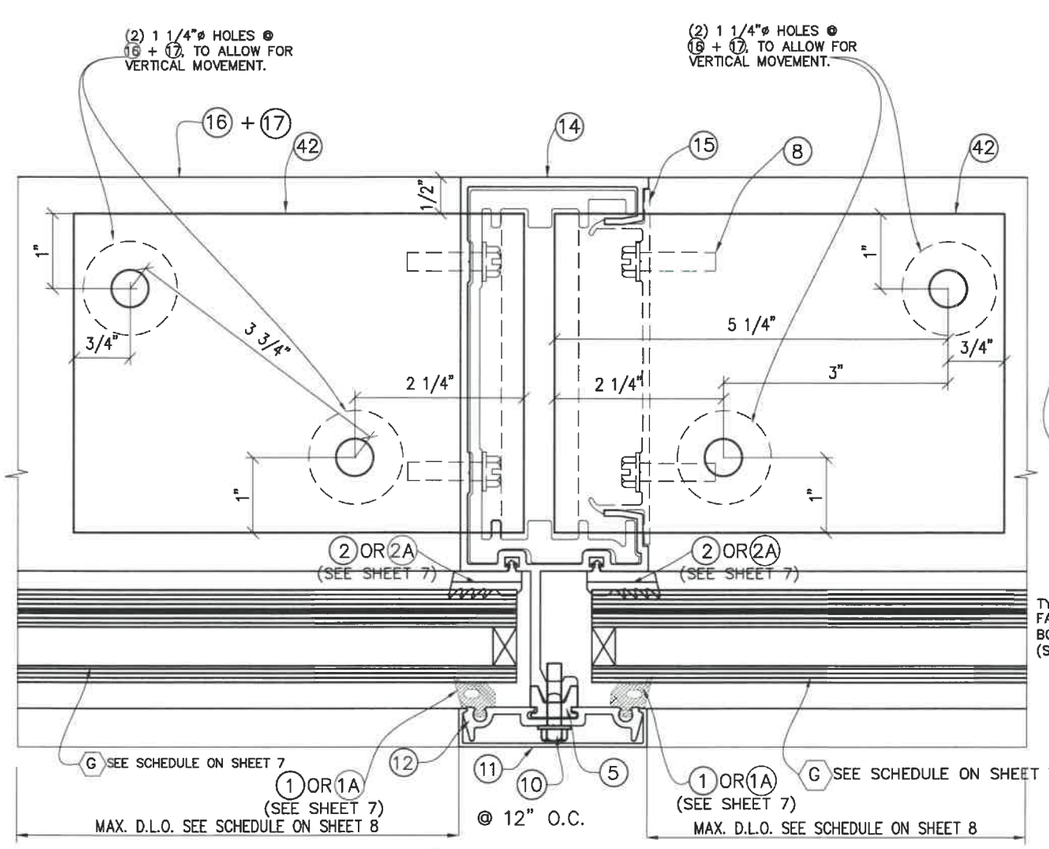


1

17A
HEAD ANCHOR
(PLAN)

1

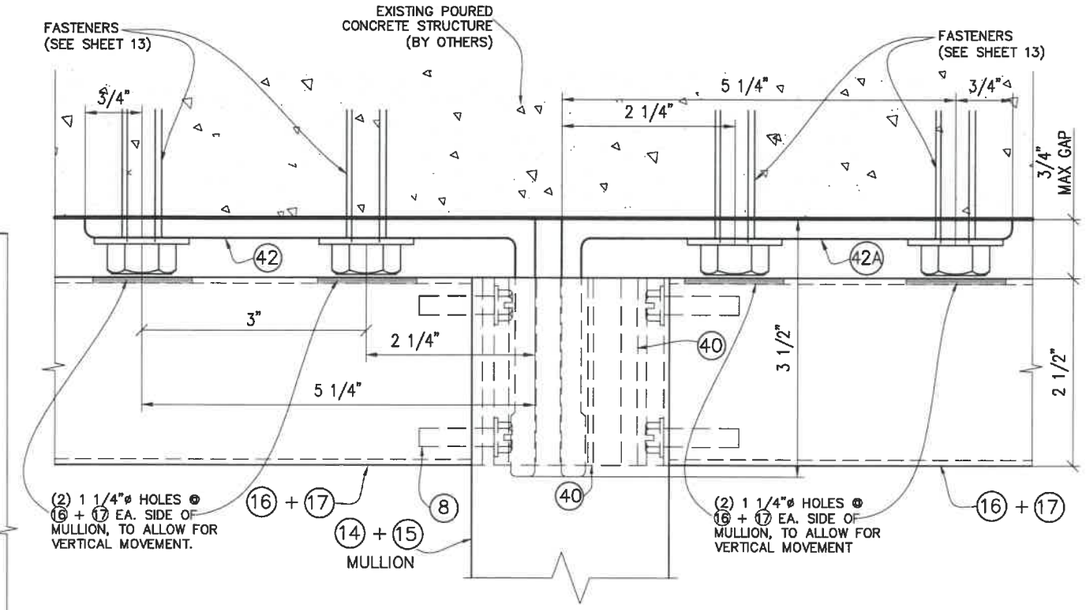


## TO EXISTING POURED CONCRETE STRUCTURE

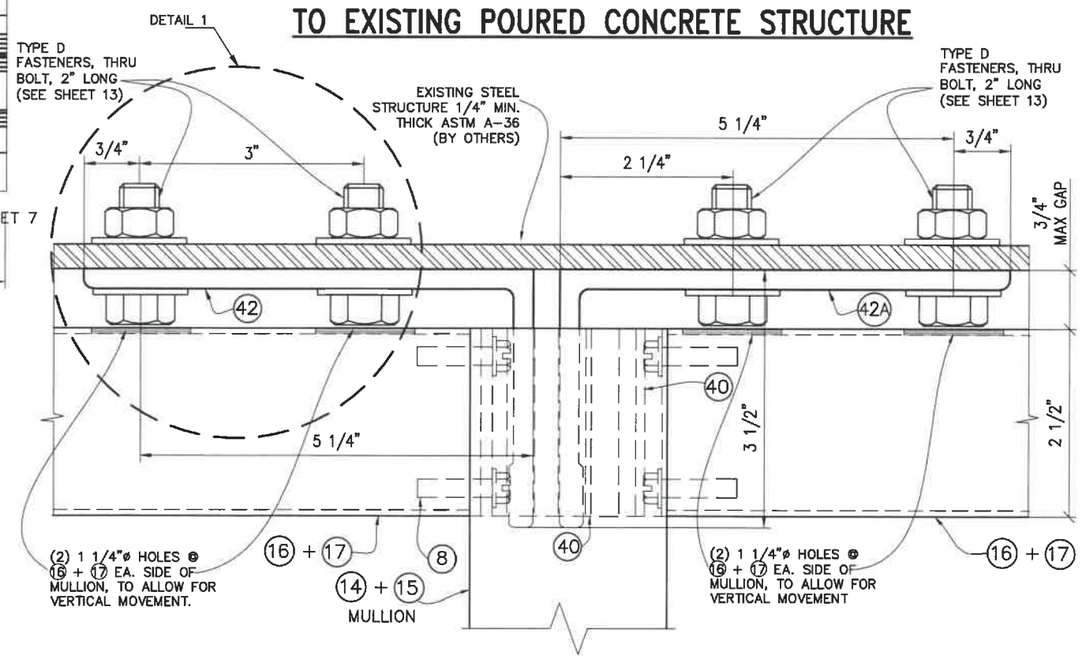


## TO EXISTING STEEL STRUCTURE

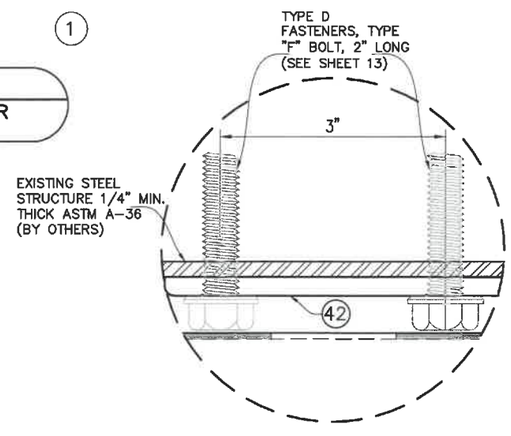


ALTERNATE FASTENER
DETAIL 1

## EXTERIOR ELEVATIONS 1

FLORIDA BUILDING CODE (High & Non High Velocity Hurricane Zone)

HR-251DG CAPTURED DRY GLAZED CURTAIN WALL SYSTEM LARGE MISSILE IMPACT INSULATED GLASS

F.R.L
DRAWN BY

04/15/2021
DATE

21-069
DRAWING No

SHEET 27 OF 36

Oldcastle BuildingEnvelope™
803 Airport Rd - Terrell, TX 75160
www.OldcastleBE.com - Phone 800-869-4567

| REV. No | DESCRIPTION | DATE | REV. No | DESCRIPTION | DATE |
|---|---|---|---|---|---|
| 1 | - | - | 3 | - | - |
| 2 | - | - | 4 | - | - |

©2021 TILTECO, INC

TILTECO INC.
TILLIT TESTING & ENGINEERING COMPANY
6355 N.W. 36th. St., Ste. 305, VIRGINIA GARDENS, FLORIDA 33166
Phone : (305)871-1531 . Fax : (305)871-1531
e-mail: tilteco@aol.com
CA-0006719
WALTER A. TILLIT Jr., P.E.
FLORIDA Lic. # 44167

P.E. SEAL/SIGNATURE/DATE

WALTER A. TILLIT JR. LICENSE No. 44167 STATE OF FLORIDA PROFESSIONAL ENGINEER

# HEAD CONNECTION OF TWIN SPAN JAMBS

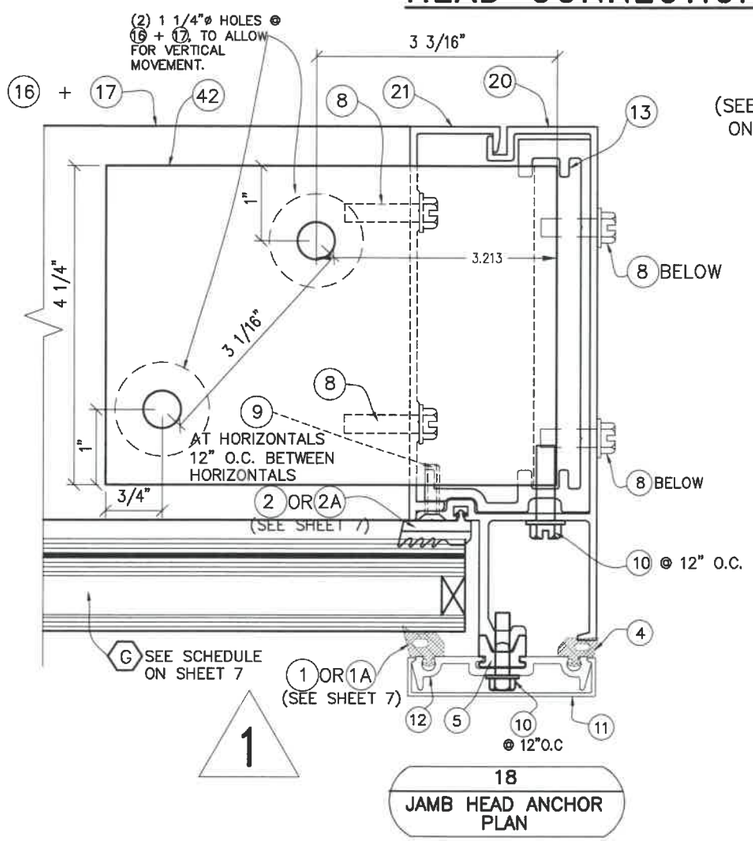


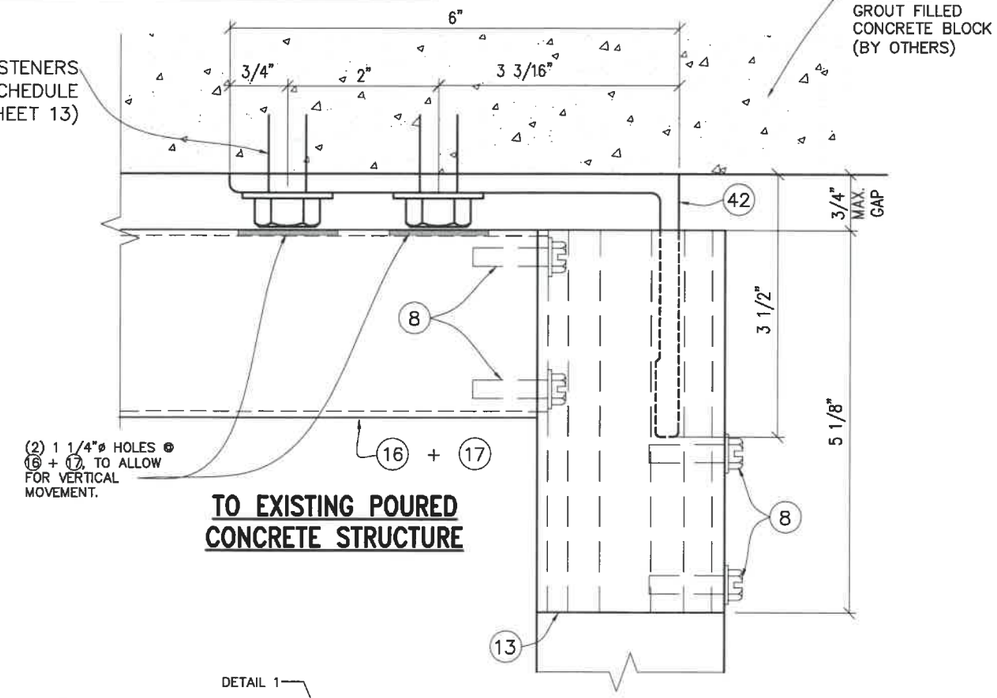


TO EXISTING POURED CONCRETE STRUCTURE

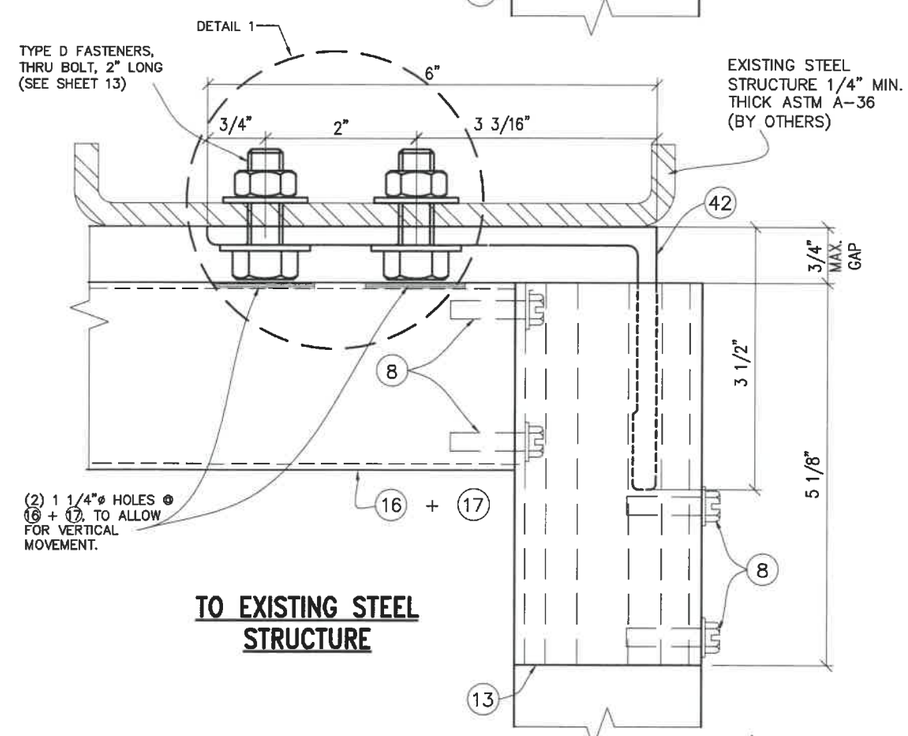


TO EXISTING STEEL STRUCTURE

EXTERIOR ELEVATIONS 1

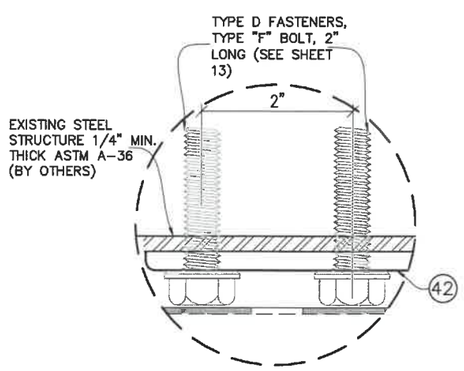


ALTERNATE FASTENER DETAIL 1

FLORIDA BUILDING CODE (High & Non High Velocity Hurricane Zone)

©2021 TILTECO, INC

TILTECO INC.
TILLIT TESTING & ENGINEERING COMPANY
6355 N.W. 36th. St. Ste. 305, VIRGINIA GARDENS, FLORIDA 33166
Phone : (305)871-1530 . Fax : (305)871-1531
e-mail: tilteco@aol.com
CA-0006719
WALTER A. TILLIT Jr., P.E.
FLORIDA Lic. # 44167

HR-251DG CAPTURED DRY GLAZED CURTAIN WALL SYSTEM LARGE MISSILE IMPACT INSULATED GLASS

Oldcastle BuildingEnvelope™
803 Airport Rd - Terrell, TX 75160
www.OldcastleBE.com - Phone 800-869-4567

| REV. No | DESCRIPTION | DATE | REV. No | DESCRIPTION | DATE |
|---|---|---|---|---|---|
| 1 | - | - | 3 | - | - |
| 2 | - | - | 4 | - | - |

| F.R.L DRAWN BY | 04/15/2021 DATE | 21-069 DRAWING No | SHEET 28 OF 36 |
|---|---|---|---|

P.E. SEAL/SIGNATURE/DATE

WALTER A. TILLIT JR. LICENSE No. 44167 STATE OF FLORIDA PROFESSIONAL ENGINEER

# HEAD CONNECTION DETAIL FOR TWIN SPAN CORNER MULLION

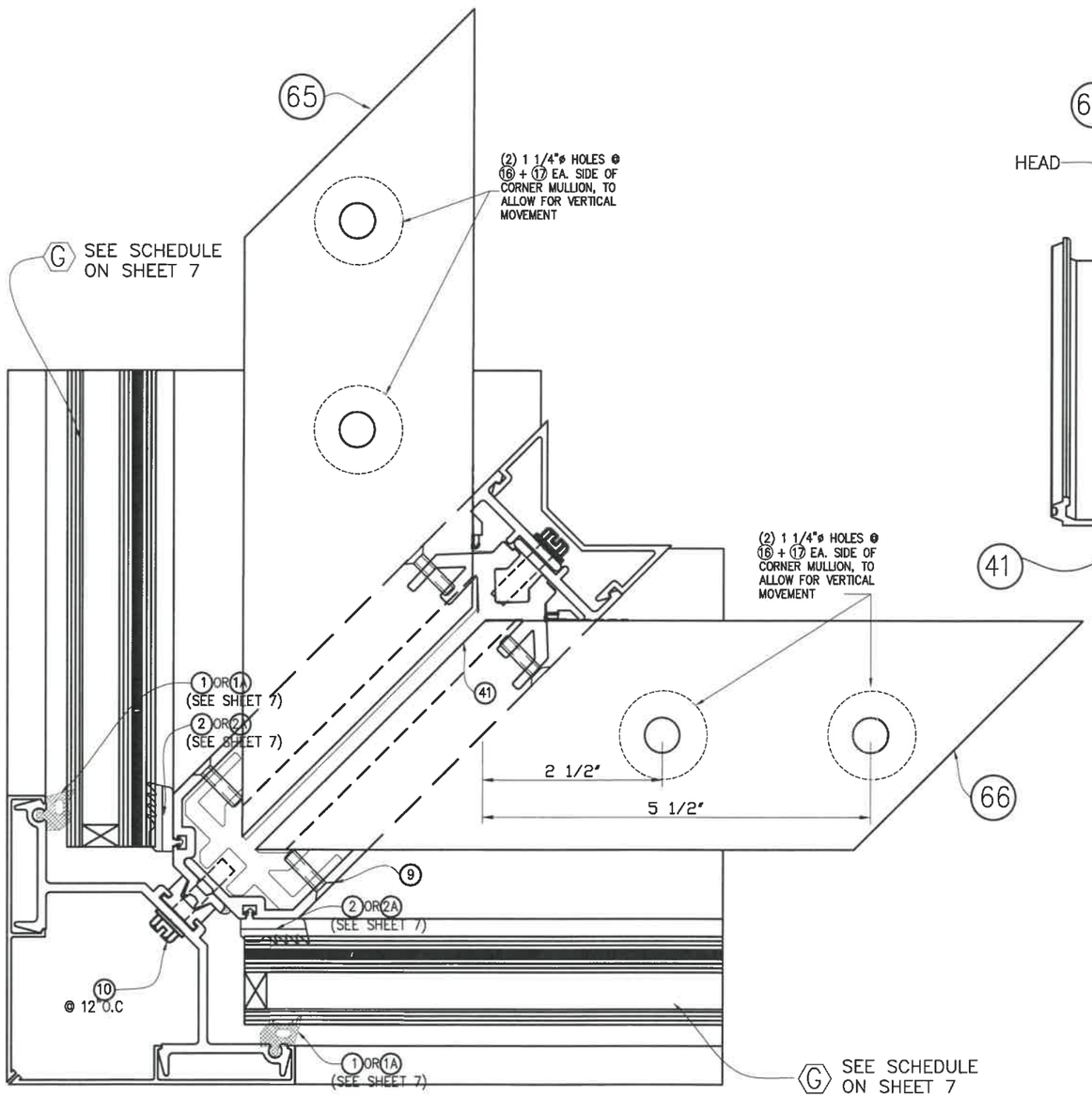


19
CORNER HEAD ANCHOR (PLAN)

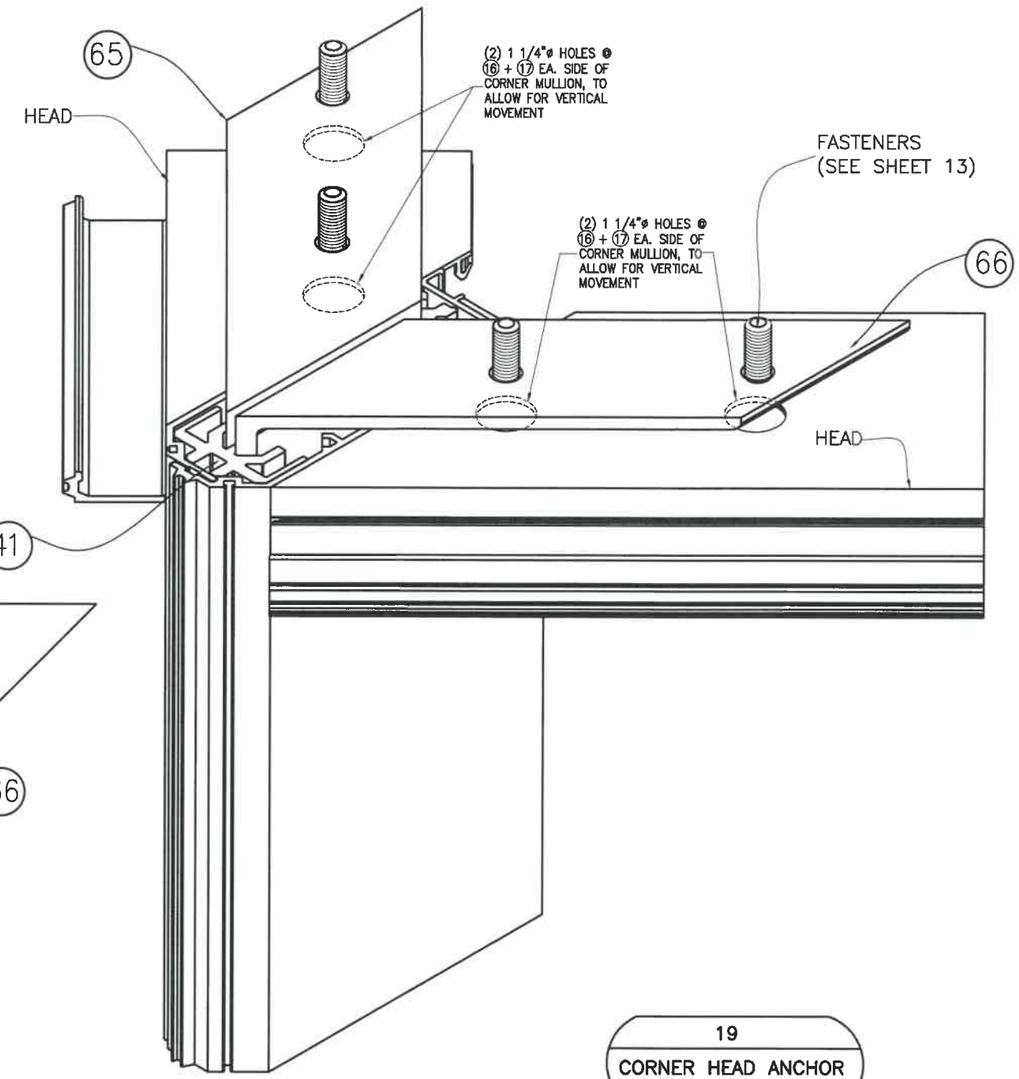


19
CORNER HEAD ANCHOR ISOMETRIC

FLORIDA BUILDING CODE (High & Non High Velocity Hurricane Zone)

HR-251DG CAPTURED DRY GLAZED CURTAIN WALL SYSTEM LARGE MISSILE IMPACT INSULATED GLASS

F.R.L
DRAWN BY

04/15/2021
DATE

21-069
DRAWING No

SHEET 29 OF 36

Oldcastle BuildingEnvelope™
803 Airport Rd - Terrell, TX 75160
www.OldcastleBE.com - Phone 800-869-4567

| REV. No | DESCRIPTION | DATE | REV. No | DESCRIPTION | DATE |
|---|---|---|---|---|---|
| 1 | - | - | 3 | - | - |
| 2 | - | - | 4 | - | - |

©2021 TILTECO, INC

TILTECO INC.
TILLIT TESTING & ENGINEERING COMPANY
6355 N.W. 36th. St., Ste. 305, VIRGINIA GARDENS, FLORIDA 33166
Phone : (305)871-1530 , Fax : (305)871-1531
e-mail: tilteco@aol.com
CA-0006719
WALTER A. TILLIT Jr., P.E.
FLORIDA Lic. # 44167

P.E. SEAL/SIGNATURE/DATE

WALTER A. TILLIT JR. LICENSE No. 44167 STATE OF FLORIDA PROFESSIONAL ENGINEER

# MULLION AND JAMB SPLICES AT TWIN SPAN ONLY (PLAN)

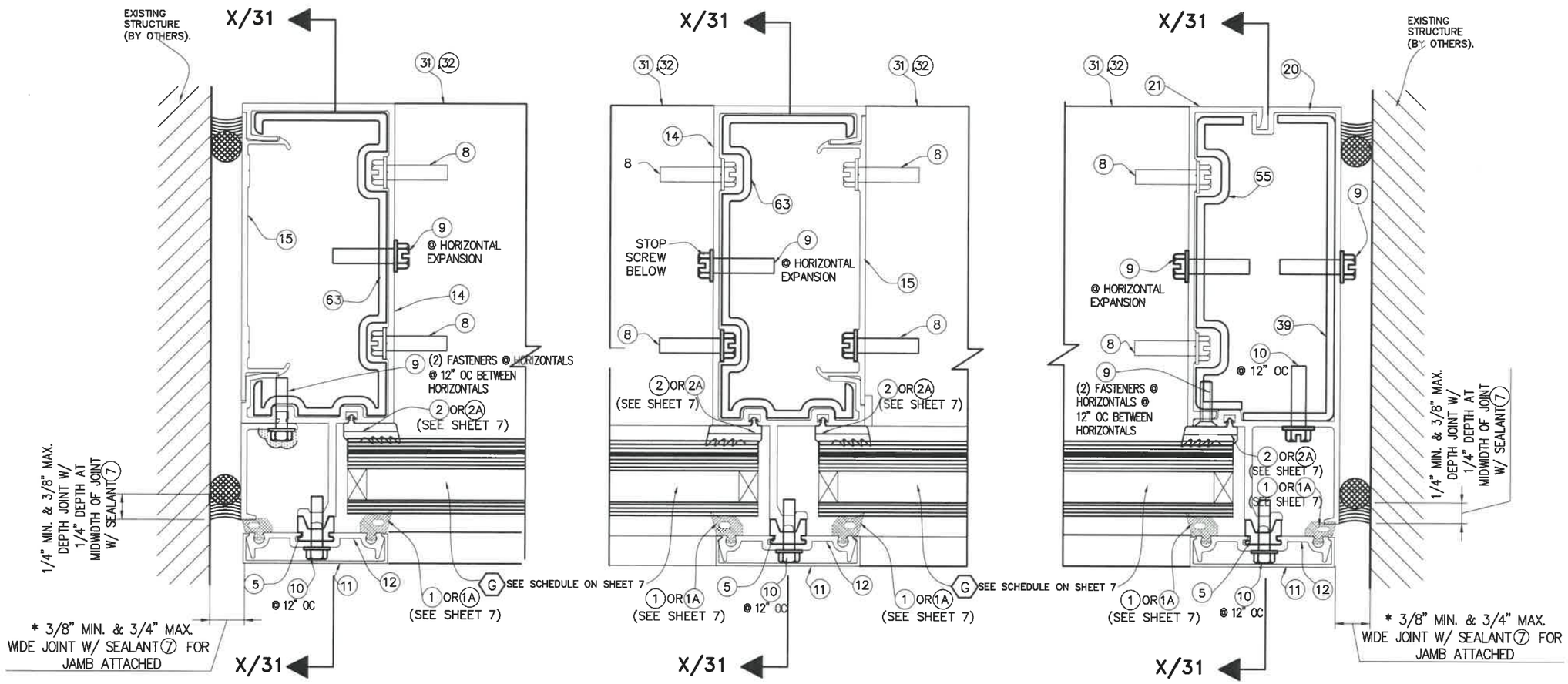


15A
SPLICE JOINT @ STANDARD JAMB W/63

15B
SPLICE JOINT @ STANDARD MULLION W/63

15C
SPLICE JOINT @ 2 PART JAMB W/55+39

* NOTE: ABOVE INDICATED MAXIMUM AND MINIMUM VALUES FOR SPECIFIED SEALANT VERTICAL JOINT WIDTH AT JAMBS CONNECTED TO WALL HAVE BEEN DETERMINED ONLY TAKING INTO CONSIDERATION THE ACTUAL MOVEMENT OF GLASS WALL AT JAMBS DUE TO THERMAL, WIND AND ITS OWN CONSTRUCTION TOLERANCE, AND NOT PERFORMANCE FACTORS FROM THE SURROUNDING STRUCTURE.

FLORIDA BUILDING CODE (High & Non High Velocity Hurricane Zone)

©2021 TILTECO, INC

HR-251DG CAPTURED DRY GLAZED CURTAIN WALL SYSTEM LARGE MISSILE IMPACT INSULATED GLASS

F.R.L
DRAWN BY

04/15/2021
DATE

21-069
DRAWING No

SHEET 30 OF 36

Oldcastle BuildingEnvelope™
803 Airport Rd - Terrell, TX 75160
www.OldcastleBE.com - Phone 800-869-4567

| REV. No | DESCRIPTION | DATE | REV. No | DESCRIPTION | DATE |
|---|---|---|---|---|---|
| 1 | - | - | 3 | - | - |
| 2 | - | - | 4 | - | - |

TILTECO INC.
TILLIT TESTING & ENGINEERING COMPANY
6355 N.W. 36th. St., Ste. 305, VIRGINA GARDENS, FLORIDA 33166
Phone : (305)871-1530 . Fax : (305)871-1531
e-mail: tilteco@aol.com
CA-0006719
WALTER A. TILLIT Jr., P.E.
FLORIDA Lic. # 44167

6/4/2021

WALTER A. TILLIT JR. LICENSE NO. 44167 STATE OF FLORIDA PROFESSIONAL ENGINEER

P.E. SEAL/SIGNATURE/DATE

# MULLION AND JAMB SPLICES AT TWIN SPAN ONLY (SIDE VIEW)

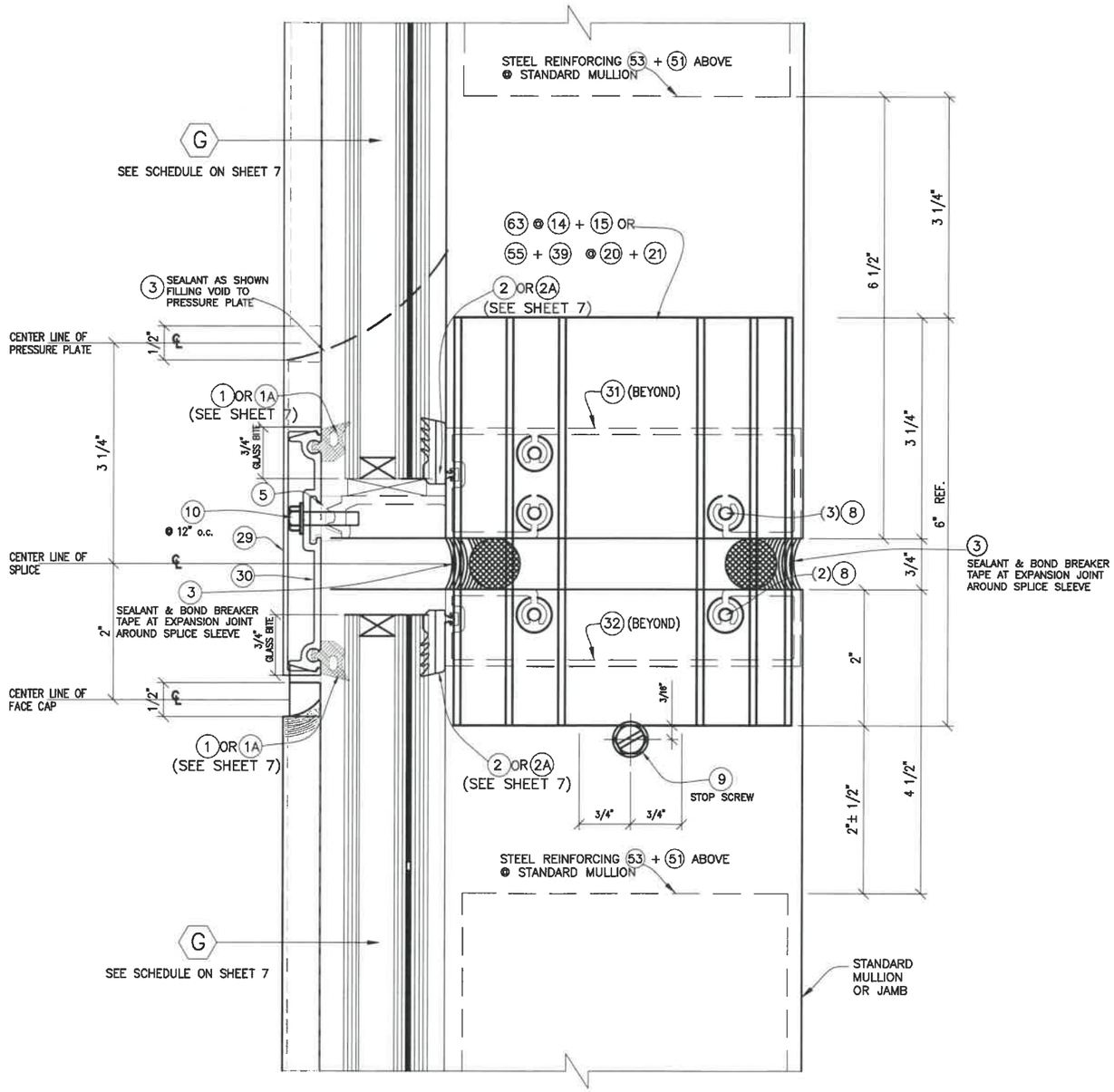


SECTION X–X
SPLICE JOINT @
STD MULLION/JAMB

FLORIDA BUILDING CODE (High & Non High Velocity Hurricane Zone)

HR-251DG CAPTURED DRY GLAZED CURTAIN WALL SYSTEM LARGE MISSILE IMPACT INSULATED GLASS

F.R.L
DRAWN BY

04/15/2021
DATE

21–069
DRAWING No

SHEET 31 OF 36

Oldcastle BuildingEnvelope™
803 Airport Rd - Terrell, TX 75160
www.OldcastleBE.com - Phone 800-869-4567

| REV. No | DESCRIPTION | DATE | REV. No | DESCRIPTION | DATE |
|---|---|---|---|---|---|
| 1 | – | – | 3 | – | – |
| 2 | – | – | 4 | – | – |

©2021 TILTECO, INC

TILTECO INC.
TILLIT TESTING & ENGINEERING COMPANY
6355 N.W. 36th. St., Ste. 305, VIRGINIA GARDENS, FLORIDA 33166
Phone : (305)871–1530 . Fax : (305)871–1531
e–mail: tilteco@aol.com
CA–0006719
WALTER A. TILLIT Jr., P.E.
FLORIDA Lic. # 44167

P.E. SEAL/SIGNATURE/DATE

WALTER A. TILLIT JR. LICENSE No. 44167 STATE OF FLORIDA PROFESSIONAL ENGINEER

# CORNER MULLION SPLICE AT TWIN SPAN (PLAN)

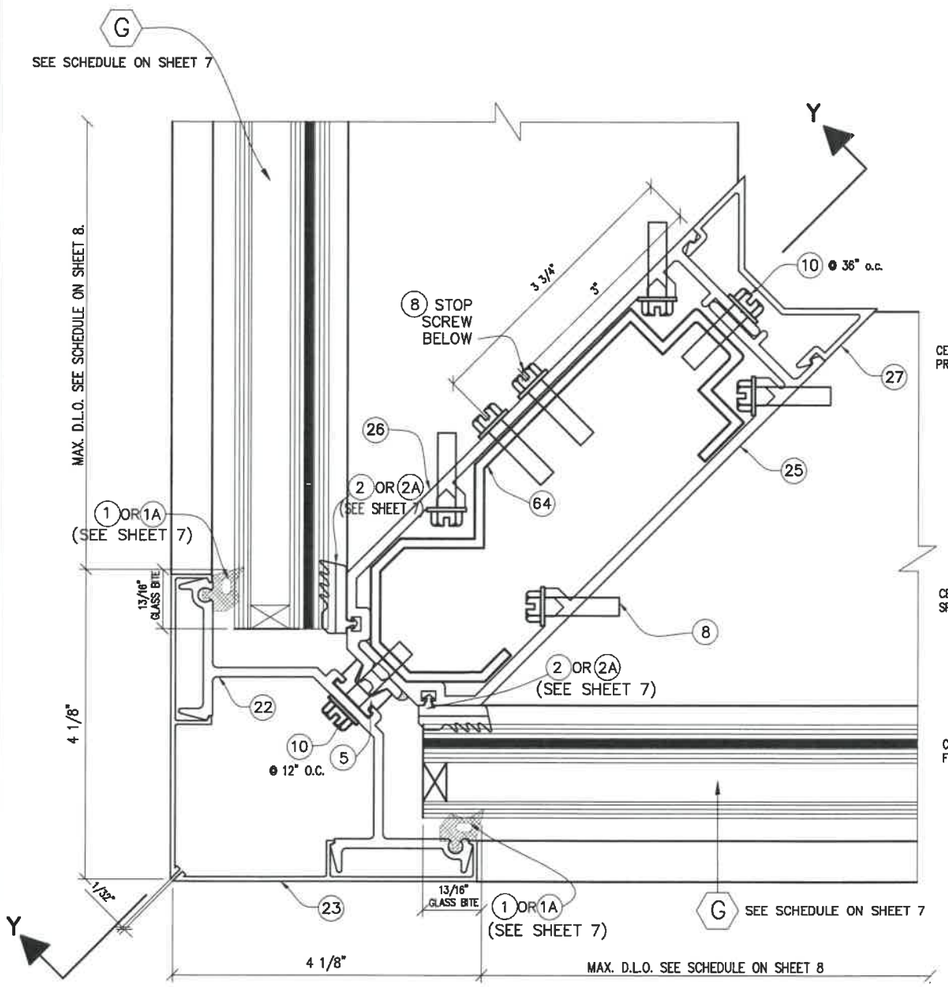


16
SPLICE JOINT @
90 DEG. CORNER
PLAN

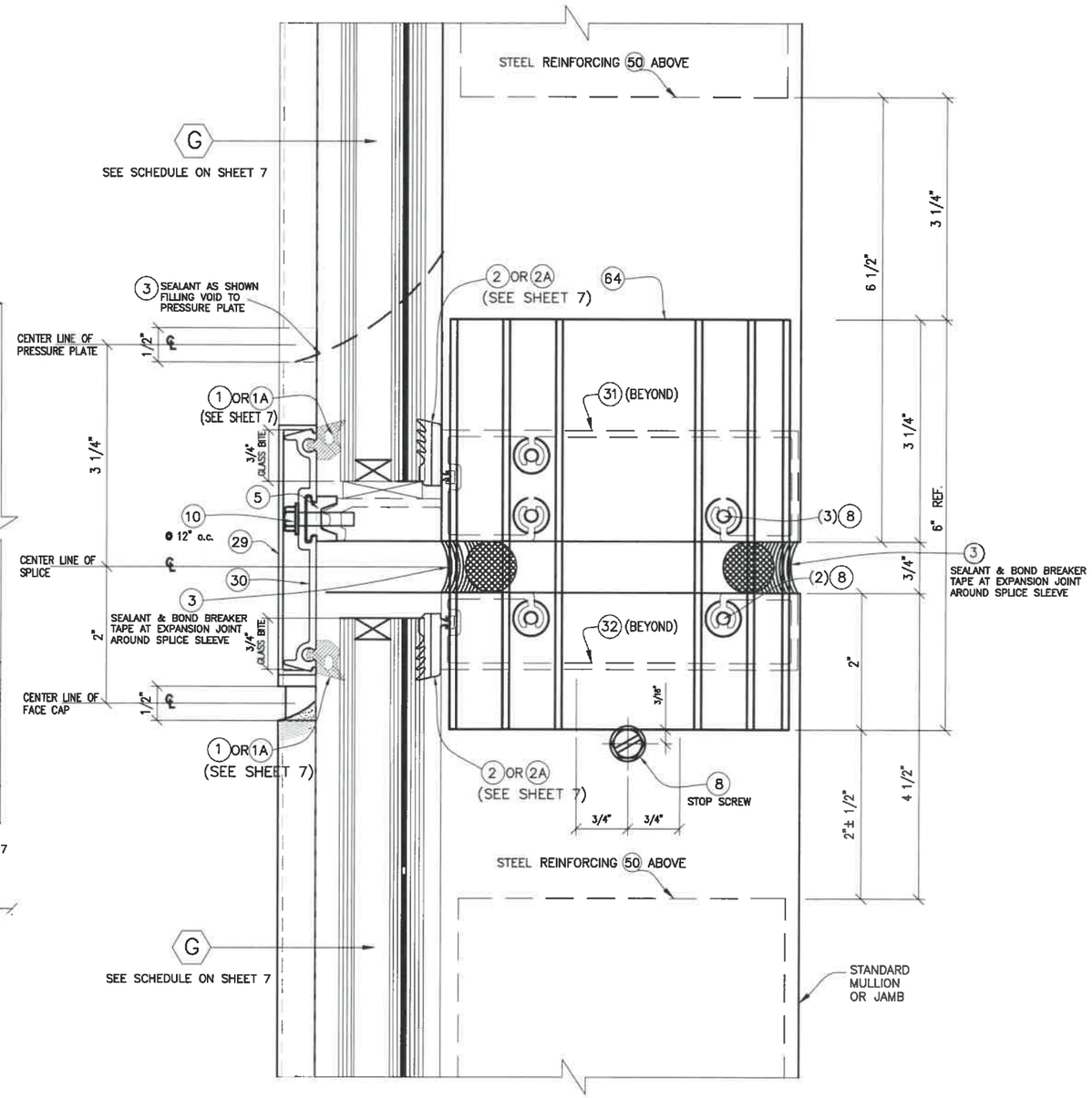


16
SPLICE JOINT @
90 DEG. CORNER
SECTION Y–Y

FLORIDA BUILDING CODE (High & Non High Velocity Hurricane Zone)

HR-251DG CAPTURED DRY GLAZED CURTAIN WALL
SYSTEM LARGE MISSILE IMPACT INSULATED GLASS

F.R.L
DRAWN BY

04/15/2021
DATE

21–069
DRAWING No

SHEET 32 OF 36

Oldcastle BuildingEnvelope™
803 Airport Rd - Terrell, TX 75160
www.OldcastleBE.com - Phone 800-869-4567

| REV. No | DESCRIPTION | DATE | REV. No | DESCRIPTION | DATE |
|---|---|---|---|---|---|
| 1 | - | - | 3 | - | - |
| 2 | - | - | 4 | - | - |

©2021 TILTECO, INC

TILTECO INC.
TILLIT TESTING & ENGINEERING COMPANY
6355 N.W. 36th. St., Ste. 305, VIRGINIA GARDENS, FLORIDA 33166
Phone : (305)871-1530 , Fax : (305)871-1531
e-mail: tilteco@aol.com
CA-0006719
WALTER A. TILLIT Jr., P.E.
FLORIDA Lic. # 44167

P.E. SEAL/SIGNATURE/DATE

WALTER A. TILLIT JR. LICENSE No. 44167 STATE OF FLORIDA PROFESSIONAL ENGINEER

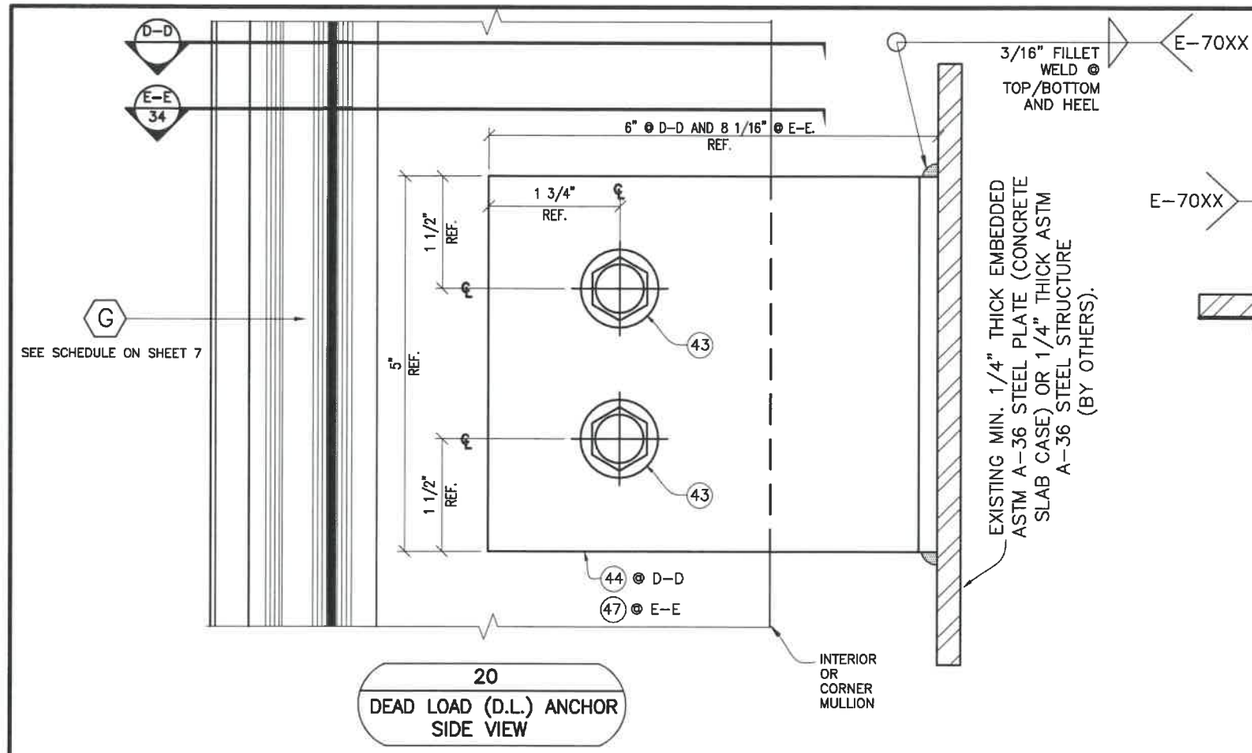


20
DEAD LOAD (D.L.) ANCHOR
SIDE VIEW

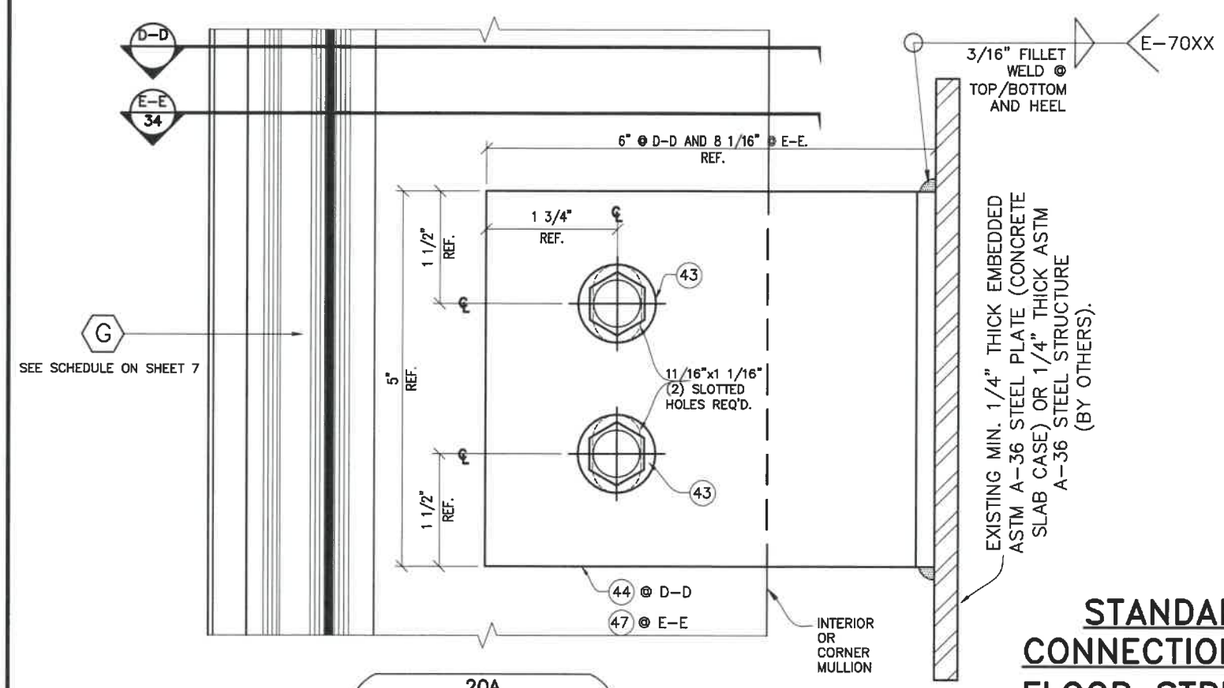


20A
WIND LOAD (W.L.) ANCHOR
SIDE VIEW

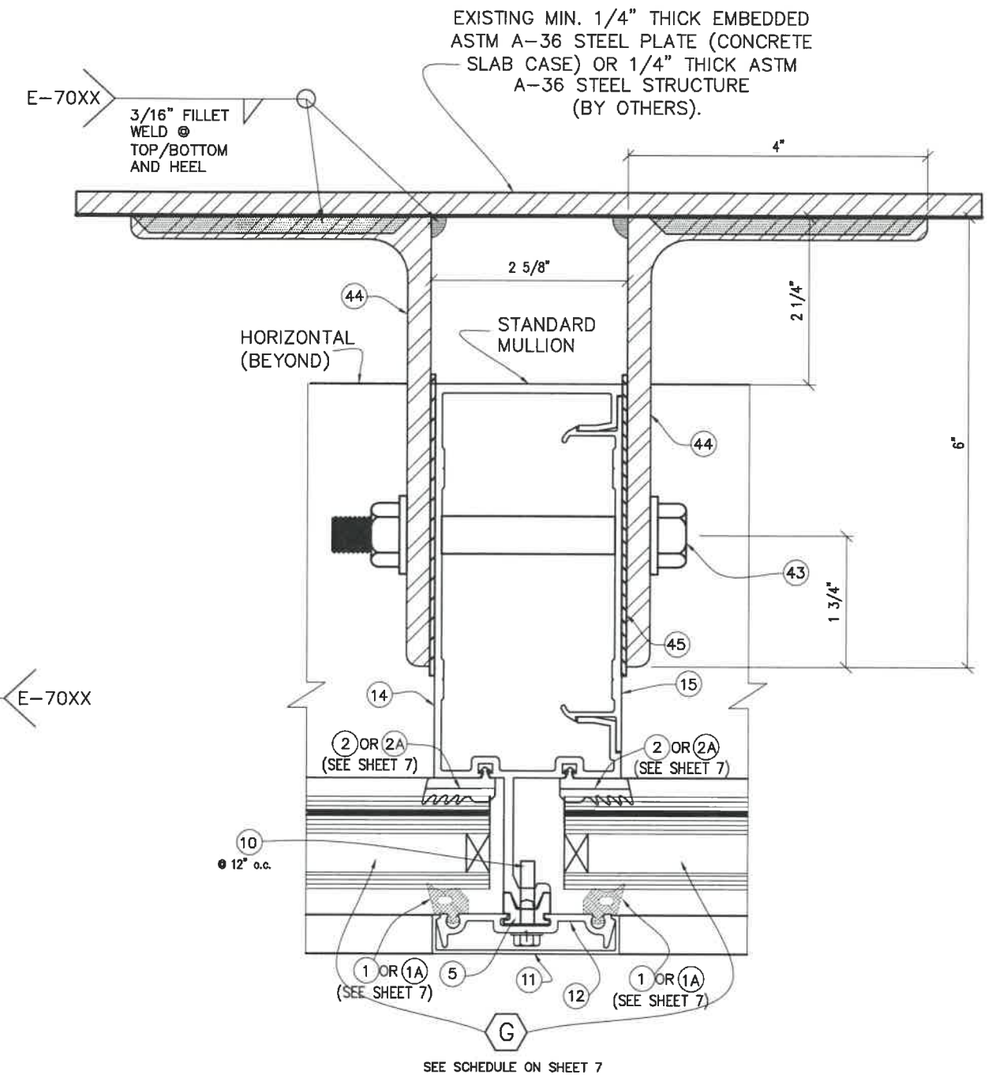


SECTION "D-D"
@ STANDARD
MULLION

# STANDARD AND CORNER MULLION CONNECTION TO EXISTING INTERMEDIATE FLOOR STRUCTURE W/ DEAD AND WIND LOAD ANCHORS

FLORIDA BUILDING CODE (High & Non High Velocity Hurricane Zone)

©2021 TILTECO, INC

HR-251DG CAPTURED DRY GLAZED CURTAIN WALL
SYSTEM LARGE MISSILE IMPACT INSULATED GLASS

TILTECO INC.
TILLIT TESTING & ENGINEERING COMPANY
6355 N.W. 36th. St., Ste. 305, VIRGINIA GARDENS, FLORIDA 33166
Phone : (305)871-1530 ; Fax : (305)871-1531
e-mail: tilteco@aol.com
CA-0006719
WALTER A. TILLIT Jr., P.E.
FLORIDA Lic. # 44167

Oldcastle BuildingEnvelope™
803 Airport Rd - Terrell, TX 75160
www.OldcastleBE.com - Phone 800-869-4567

| REV. No | DESCRIPTION | DATE | REV. No | DESCRIPTION | DATE |
|---|---|---|---|---|---|
| 1 | - | - | 3 | - | - |
| 2 | - | - | 4 | - | - |

F.R.L
DRAWN BY

04/15/2021
DATE

21-069
DRAWING No

SHEET 33 OF 36

P.E. SEAL/SIGNATURE/DATE

WALTER A. TILLIT JR. LICENSE No. 44167 STATE OF FLORIDA PROFESSIONAL ENGINEER

# CORNER MULLION CONNECTION TO EXISTING INTERMEDIATE FLOOR STRUCTURE W/ DEAD AND WIND LOAD ANCHORS (PLAN)

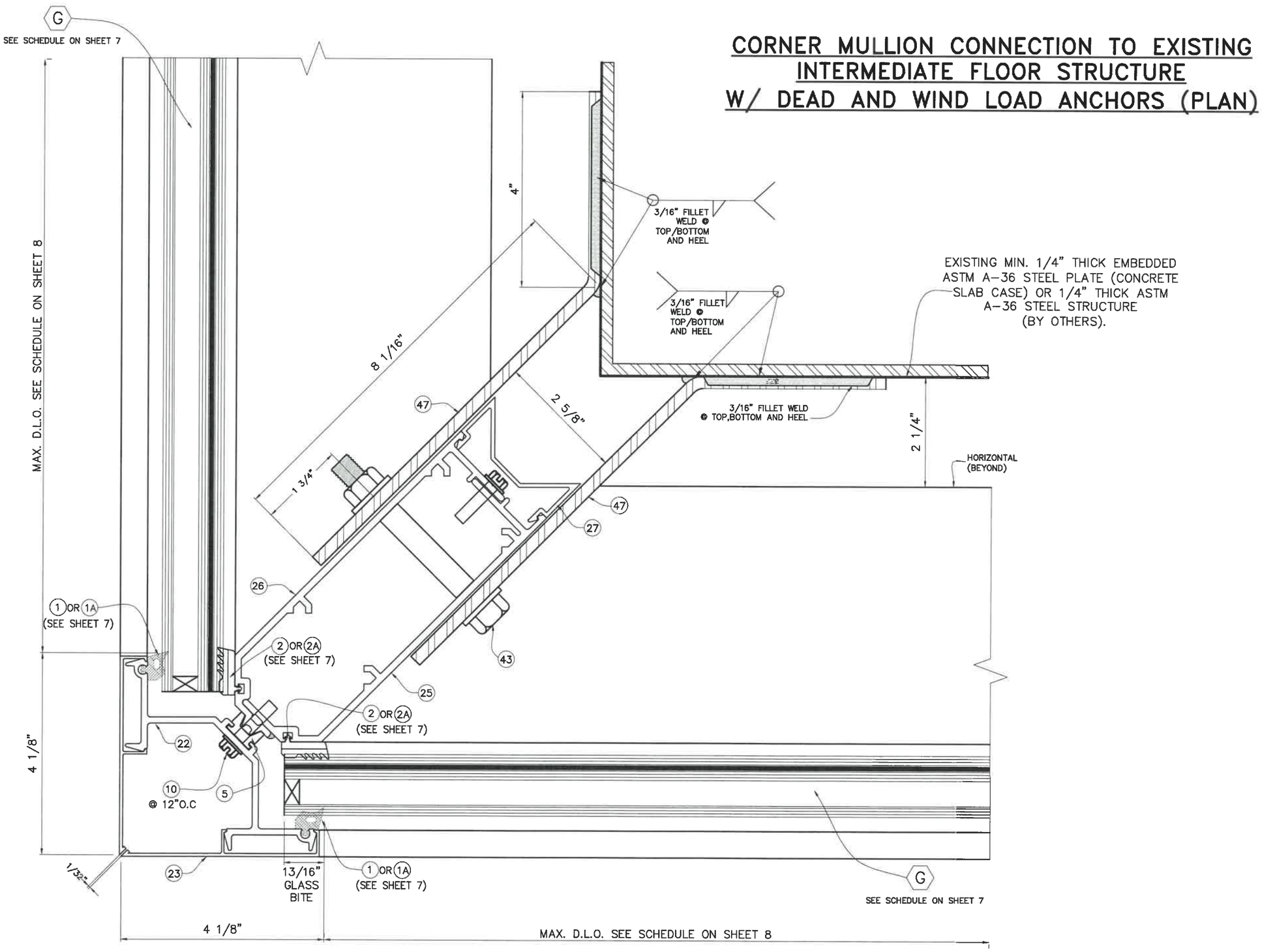


## SECTION "E-E" @ CORNER MULLION

FLORIDA BUILDING CODE (High & Non High Velocity Hurricane Zone)

HR-251DG CAPTURED DRY GLAZED CURTAIN WALL SYSTEM LARGE MISSILE IMPACT INSULATED GLASS

F.R.L
DRAWN BY

04/15/2021
DATE

21-069
DRAWING No

SHEET 34 OF 36

Oldcastle BuildingEnvelope™
803 Airport Rd - Terrell, TX 75160
www.OldcastleBE.com - Phone 800-869-4567

| REV. No | DESCRIPTION | DATE | REV. No | DESCRIPTION | DATE |
|---|---|---|---|---|---|
| 1 | - | - | 3 | - | - |
| 2 | - | - | 4 | - | - |

©2021 TILTECO, INC

TILTECO INC.
TILLIT TESTING & ENGINEERING COMPANY
6355 N.W. 36th. St. Ste. 305, VIRGINIA GARDENS, FLORIDA 33166
Phone : (305)871-1530 , Fax : (305)871-1531
e-mail: tilteco@aol.com
CA-0006719
WALTER A. TILLIT Jr., P.E.
FLORIDA Lic. # 44167

P.E. SEAL/SIGNATURE/DATE

WALTER A. TILLIT JR. LICENSE No. 44167 STATE OF FLORIDA PROFESSIONAL ENGINEER

## DOOR HEADER CONNECTION TO CURTAIN WALL HORIZONTALS

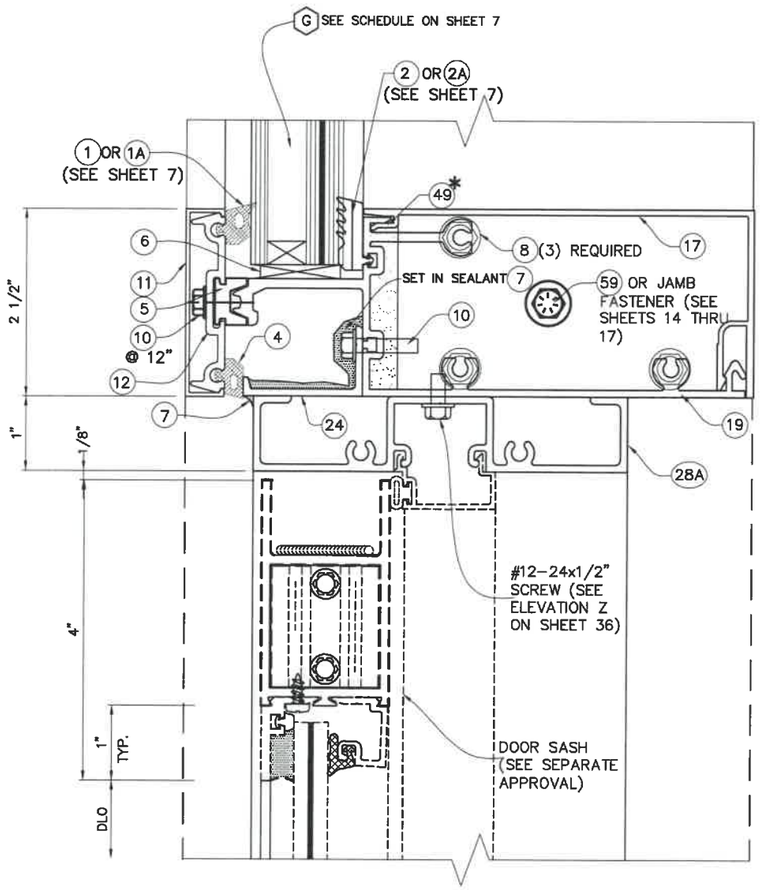


10
DR HEADER

## DOOR SILL CONNECTION TO POURED CONCRETE STRUCTURE AND TO ADJACENT CURTAIN WALL MULLION "F" (SEE SHEET 9 FOR DEFINITION OF "F")

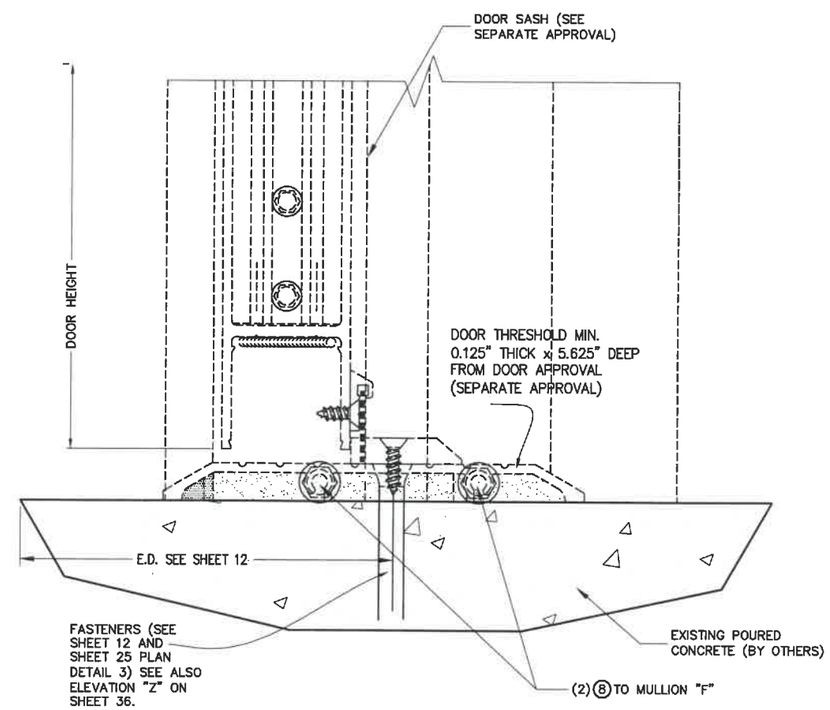


13
THRESHOLD

FLORIDA BUILDING CODE (High & Non High Velocity Hurricane Zone)

HR-251DG CAPTURED DRY GLAZED CURTAIN WALL SYSTEM LARGE MISSILE IMPACT INSULATED GLASS

F.R.L
DRAWN BY

04/15/2021
DATE

21-069
DRAWING No

SHEET 35 OF 36

Oldcastle BuildingEnvelope™
803 Airport Rd - Terrell, TX 75160
www.OldcastleBE.com - Phone 800-869-4567

| REV. No | DESCRIPTION | DATE | REV. No | DESCRIPTION | DATE |
|---|---|---|---|---|---|
| 1 | - | - | 3 | - | - |
| 2 | - | - | 4 | - | - |

©2021 TILTECO, INC

TILTECO INC.
TILLIT TESTING & ENGINEERING COMPANY
6355 N.W. 36th. St., Ste. 305, VIRGINIA GARDENS, FLORIDA 33166
Phone : (305)871-1530 , Fax : (305)871-1531
e-mail: tilteco@aol.com
CA-0006719
WALTER A. TILLIT Jr., P.E.
FLORIDA Lic. # 44167

P.E. SEAL/SIGNATURE/DATE

WALTER A. TILLIT JR. LICENSE No. 44167 STATE OF FLORIDA PROFESSIONAL ENGINEER

# DOOR JAMBS CONNECTION TO CURTAIN WALL

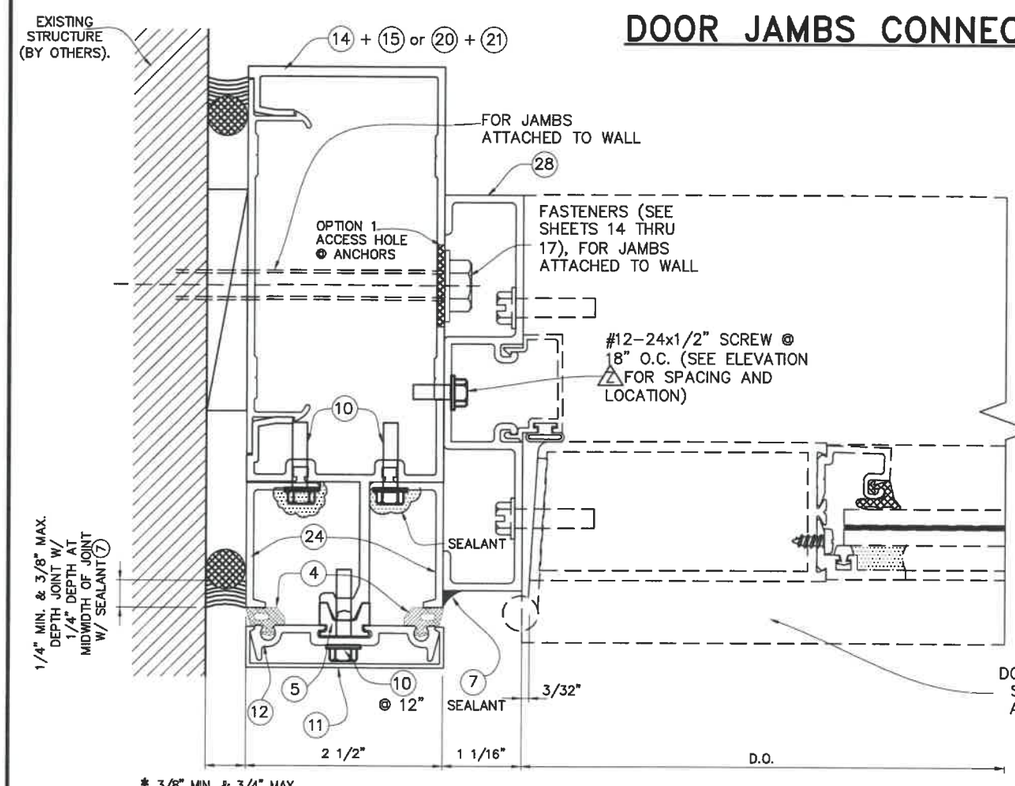


* 3/8" MIN. & 3/4" MAX. WIDE JOINT W/ SEALANT (7) FOR JAMB ATTACHED TO WALL & 1/2" MIN. & 1 3/8" MAX. WIDE JOINT W/ SEALANT (7) FOR JAMB NOT ATTACHED TO WALL

6

DOOR JAMB TO CURTAIN WALL JAMB

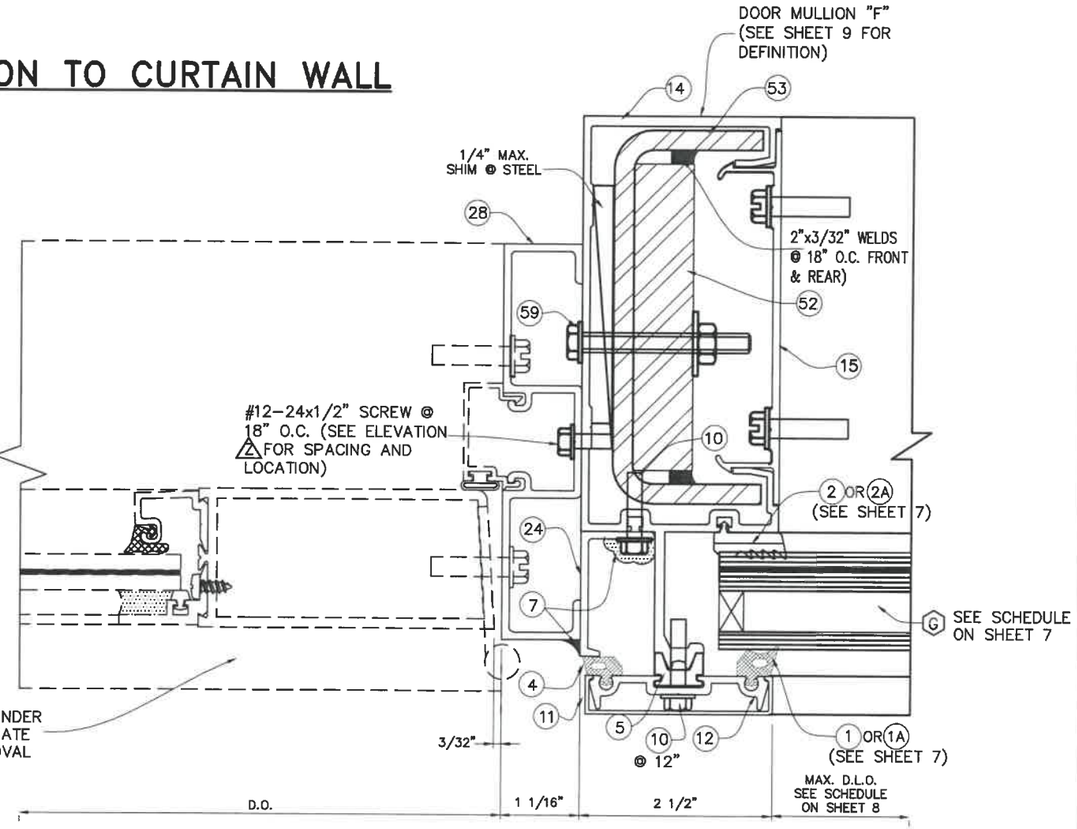


7

DOOR JAMB TO CURTAIN WALL DOOR JAMB MULLION

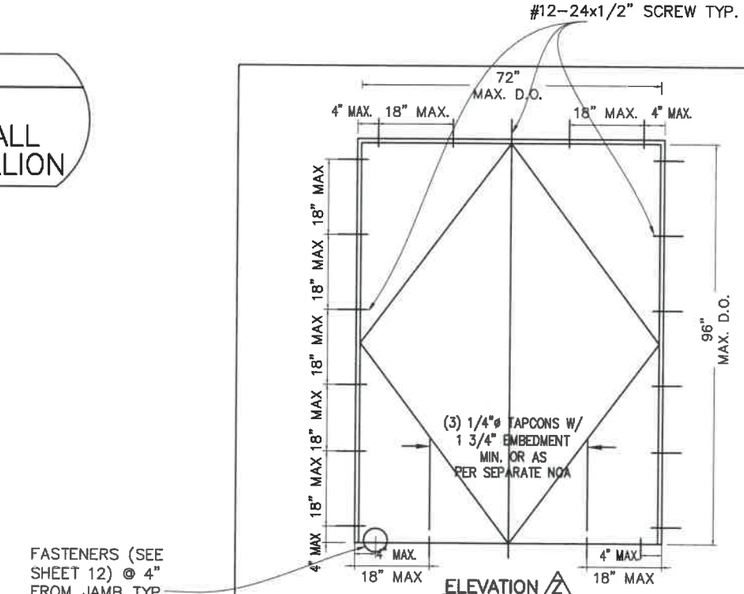


ELEVATION 2

LOCATIONS FOR DOOR FRAME ATTACHMENTS

ABOVE DIMENSIONS ARE MAXIMUM SIZES TESTED

* NOTE: ABOVE INDICATED MAXIMUM AND MINIMUM VALUES FOR SPECIFIED SEALANT VERTICAL JOINT WIDTH AT JAMBS CONNECTED & NOT CONNECTED TO WALL (FREE STANDING) HAVE BEEN DETERMINED ONLY TAKING INTO CONSIDERATION THE ACTUAL MOVEMENT OF GLASS WALL AT JAMBS DUE TO THERMAL, WIND AND ITS OWN CONSTRUCTION TOLERANCE, AND NOT PERFORMANCE FACTORS FROM THE SURROUNDING STRUCTURE.

FLORIDA BUILDING CODE (High & Non High Velocity Hurricane Zone)

HR-251DG CAPTURED DRY GLAZED CURTAIN WALL SYSTEM LARGE MISSILE IMPACT INSULATED GLASS

F.R.L
DRAWN BY

04/15/2021
DATE

21-069
DRAWING No

SHEET 36 OF 36

Oldcastle BuildingEnvelope™
803 Airport Rd - Terrell, TX 75160
www.OldcastleBE.com - Phone 800-869-4567

| REV. No | DESCRIPTION | DATE | REV. No | DESCRIPTION | DATE |
|---|---|---|---|---|---|
| 1 | - | - | 3 | - | - |
| 2 | - | - | 4 | - | - |

©2021 TILTECO, INC

TILTECO INC.
TILLIT TESTING & ENGINEERING COMPANY
6355 N.W. 36th. St., Ste. 305, VIRGINIA GARDENS, FLORIDA 33166
Phone : (305)871-1530 . Fax : (305)871-1531
e-mail: tilteco@aol.com
CA-0006719
WALTER A. TILLIT Jr., P.E.
FLORIDA Lic. # 44167

P.E. SEAL/SIGNATURE/DATE

WALTER A. TILLIT JR. LICENSE No. 44167 STATE OF FLORIDA PROFESSIONAL ENGINEER